PRELIMINARY WATER QUALITY TECHNICAL REPORT

BREAKWATER

CITY OF IMPERIAL BEACH, CA

OCTOBER 2011

PROJECT NUMBER: MF 1062

Prepared For:

SUDBERRY-PALM AVENUE, LLC
5465 Morehouse Drive, Suite 260
San Diego, CA 92121

Prepared By:

PROJECT DESIGN CONSULTANTS
Planning | Landscape Architecture | Engineering | Survey

701 B Street, Suite 800
San Diego, CA 92101
619.235.6471 Tel
619.234.0349 Fax

Job No. 3813

Prepared by: Chelisa Pack, P.E.
Under the supervision of

Debby Reece, PE RCE 56148
Registration Expires 12/31/12

TABLE OF CONTENTS

1. INTRODUCTION 1

2. PROJECT DESCRIPTION 2

3. POLLUTANTS AND CONDITIONS OF CONCERN 3

Anticipated and Potential Pollutants from the Project Area 3

Pollutants of Concern in Receiving Waters 4

Beneficial Uses 4

Impaired Water Bodies 6

Watershed Pollutants of Concern 6

Target Pollutants 6

Hydrologic Conditions of Concern 7

4. STORM WATER BEST MANAGEMENT PRACTICES 9

Source Control BMPs 9

Priority Development Project (PDP) LID BMPs 15

Treatment Control BMPs 17

Selected Treatment Control BMP(s) 19

Justification for Selected Treatment Control BMP(s) 19

Treatment Train Summary 20

BMP Plan Assumptions 20

5. PROJECT BMP PLAN IMPLEMENTATION 23

Construction BMPs 23

Recommended Post-Construction BMP Plan 23

Operation and Maintenance Plans 24

6. PROJECT BMP COSTS AND FUNDING SOURCES 25

TABLES

Table 1. Anticipated and Potential Pollutants Generated by Land Use Type 3

Table 2. Beneficial Uses for Coastal Surface Waters 4

Table 3. Beneficial Uses for Groundwater 4

Table 4. Source Control BMPs 9

Table 5. Grouping of Potential Pollutants of Concern by Fate During Stormwater Treatment ... 18

Table 6. Structural BMP Selection Matrix 19

Table 7. Numeric Sizing Treatment Standards 21

Table 8. BMP Costs 25

APPENDICES

1. Storm Water Requirements Applicability Checklist
2. Project Maps
3. Educational Materials
4. BMP Sizing Calculations and Design Details
5. BMP Operation and Maintenance Procedures

1. INTRODUCTION

As part of the Tentative Map submittal, this Preliminary Water Quality Technical Report (WQTR) was prepared to define selected project Best Management Practice (BMP) options that satisfy the requirements identified in the following documents:

- City of Imperial Beach Municipal Code, Chapter 8.32, Standard Urban Stormwater Mitigation Plan,
- California Regional Water Quality Control Board, San Diego Region, Order No. R9-2007-0001, NPDES No. CAS0108758, Waste Discharge Requirements for Discharges of Urban Runoff from the Municipal Separate Storm Sewer Systems (MS4s) Draining the Watersheds of the County of San Diego, the Incorporated Cities of San Diego County, the San Diego Unified Port District, and the San Diego County Regional Airport Authority,
- State Water Resources Control Board (SWRCB) NPDES General Permit for Storm Water Discharges Associated with Construction and Land Disturbance Activities (Water Quality Order 2009-0009-DWQ).

Specifically, this report includes the following:

- Project description and location with respect to the Water Quality Control Plan for the San Diego Region (Basin Plan);
- BMP design criteria and water quality treatment calculations;
- Recommended BMP options for the project;
- BMP device information for the recommended BMP options; and
- Operation, maintenance, and funding for the proposed BMPs.

2. PROJECT DESCRIPTION

This WQTR is provided for Breakwater. The project is bound by Palm Avenue/SR75 to the north, 7th Street to the west, 9th Street to the east, and a public alley (located north of Donax Avenue) to the south. The vicinity and site maps are available in Appendix 2. The total project ownership consists of 5.11 acres, including the easterly half-width of 8th Avenue within the site boundary. The project includes the proposed dedication of the existing alley along the southerly site perimeter, so the total project area is 4.75 acres.

The proposed project consists of the redevelopment of an existing commercial development. The project proposes to demolish the existing parking lots and commercial buildings and elevate the site with imported fill material to bring the site up to grade with Palm Avenue. The project will consist of the construction of seven proposed commercial buildings and associated parking lots, utilities, and landscaping. In addition to the onsite improvements, the offsite public improvements include realigning a portion of Palm Avenue by eliminating the existing through lanes adjacent to the site's northerly frontage. The project will also realign the storm drain within 9th Street and upsize the pipe diameter to increase the conveyance capacity. The project area currently consists of an existing commercial development with at-grade parking lots. The site is mostly impervious, with minimal areas of onsite landscaping.

3. POLLUTANTS AND CONDITIONS OF CONCERN

Anticipated and Potential Pollutants from the Project Area

Anticipated pollutants from the site under proposed conditions include sediments, nutrients, heavy metals, organic compounds, trash and debris, oxygen demanding substances, oil and grease, bacteria and viruses, and pesticides.

TABLE 1. ANTICIPATED AND POTENTIAL POLLUTANTS GENERATED BY LAND USE TYPE

General Project Categories	General Pollutant Categories								
	Sediment	Nutrients	Heavy Metals	Organic Compounds	Trash & Debris	Oxygen Demanding Substances	Oil & Grease	Bacteria & Viruses	Pesticides
Proposed:									
Housing Development	X	X			X	X	X	X	X
Attached Residential Development	X	X			X	P(1)	P(2)	P(1)	X
Commercial Development	**P(1)**	**P(1)**		**P(2)**	**X**	**P(5)**	**X**	**P(3)**	**P(5)**
Industrial Development	X	P(1)	X(4)(5)	X	X	X	X		
Automotive Repair Shop			X	X(4)(5)	X		X		
Restaurants					**X**	**X**	**X**	**X**	
Steep Hillside Development	X	X			X	X	X		X
Parking Lots	**P(1)**	**P(1)**	**X**		**X**	**P(1)**	**X**		**P(1)**
Streets, Highways & Freeways	**X**	**P(1)**	**X**	**X(4)**	**X**	**P(5)**	**X**		
Retail Gasoline Outlet (RGO)			X	X	X	X	X		

Notes for Table 1:	
X = Anticipated Pollutant P = Potential Pollutant	(1) A potential pollutant if landscaping exists onsite. (2) A potential pollutant if the project includes uncovered parking areas. (3) A potential pollutant if land use involves food or animal waste products. (4) Including petroleum hydrocarbons (5) Including solvents

Source: "Table 2. Anticipated and Potential Pollutants Generated by Land Use Type," City of Imperial Beach Municipal Code Section 8.32.130

Pollutants of Concern in Receiving Waters

The Breakwater Project is located in the Otay Watershed Watershed (Hydrologic Unit 910) and is tributary to San Diego Bay.[1] The sections below provide the beneficial uses and identification of impaired water bodies within the project's hydrologic area.

Beneficial Uses

The beneficial uses of the coastal surface waters and the groundwater basins must not be threatened by the project. Tables 2 and 3 list the beneficial uses for the surface waters and groundwater within the project's hydrologic area.

TABLE 2. BENEFICIAL USES FOR COASTAL SURFACE WATERS

Coastal Water	IND	NAV	REC1	REC2	COMM	BIOL	EST	WILD	RARE	MAR	AQUA	MIGR	SPWN	WARM	SHELL
San Diego Bay	E	E	E	E	E	E	E	E	E	E	N	E	E	N	E

TABLE 3. BENEFICIAL USES FOR GROUNDWATER

Hydrologic Area	MUN	AGR	IND	PROC	FRSH	GWR
Otay Valley, 910.20	E	E	E	N	N	N

Source: San Diego Regional Water Quality Control Board, Water Quality Control Plan for the San Diego Basin, Chapter 2, Table 2-2. Beneficial Uses of Inland Surface Waters, and Table 2-5. Beneficial Uses of Ground Waters (2007 update)

Notes for Tables 2 and 3:

+: Excepted from MUN (see text)

E: Existing beneficial use

[1] Water Quality Control Plan for the San Diego Basin, San Diego Regional Water Quality Control Board

P: Potential beneficial use

N: Not a beneficial use

IND - Industrial Services Supply: Includes use of water for industrial activities that do not depend primarily on water quality including, but not limited to, mining, cooling water supply, hydraulic conveyance, gravel washing, fire protection, or oil well re-pressurization.

NAV - Navigation: Includes uses of water for shipping, travel, or other transportation by private, military, or commercial vessels.

REC1 - Contact Recreation: Includes use of water for recreational activities involving body contact with water where ingestion of water is reasonably possible. These uses include, but are not limited to, swimming, wading, water-skiing, skin and SCUBA diving, surfing, white water activities, fishing, or use of natural hot springs.

REC2 - Non-Contact Recreation: Includes use of water for recreation involving proximity to water, but not normally involving body contact with water where ingestion of water is reasonably possible. These uses include, but are not limited to, picnicking, sunbathing, hiking, camping, boating, tide pool and marine life study, hunting, sightseeing, or aesthetic enjoyment in conjunction with the above activities.

COMM - Commercial and Sport Fishing: Includes the uses of water for commercial or recreational collection of fish, shellfish, or other organisms including, but not limited to, uses involving organisms intended for human consumption or bait purposes.

BIOL - Preservation of Biological Habitats of Special Significance: Includes uses of water that support designated areas or habitats, such as established refuges, parks, sanctuaries, ecological reserves, or Areas of Special Biological Significance (ASBS), where the preservation or enhancement of natural resources requires special protection.

EST - Estuarine Habitat: Includes uses of water that support estuarine ecosystems including, but not limited to, preservation or enhancement of estuarine habitats, vegetation, fish, shellfish, or wildlife (e.g., estuarine mammals, waterfowl, shorebirds).

WILD - Wildlife Habitat: Includes uses of water that support terrestrial ecosystems including but not limited to, preservation and enhancement of terrestrial habitats, vegetation, wildlife, (e.g., mammals, birds, reptiles, amphibians, invertebrates), or wildlife and food sources.

RARE - Rare, Threatened, or Endangered Species: Includes uses of water that support habitats necessary, at least in part, for the survival and successful maintenance of plant or animal species established under state or federal law as rare, threatened or endangered.

MAR - Marine Habitat: Includes uses of water that support marine ecosystems including, but not limited to, preservation or enhancement of marine habitats, vegetation such as kelp, fish, shellfish, or wildlife (e.g., marine mammals, shorebirds).

AQUA - Aquaculture: Includes the uses of water for aquaculture or mariculture operations including, but not limited to, propagation, cultivation, maintenance, or harvesting of aquatic plants and animals for human consumption or bait purposes.

MIGR - Migration of Aquatic Organisms: Includes uses of water that support habitats necessary for migration, acclimatization between fresh and salt water, or other temporary activities by aquatic organisms, such as anadromous fish.

SPWN - Spawning, Reproduction, and/or Early Development: Includes uses of water that support high quality aquatic habitats suitable for reproduction and early development of fish. This use is applicable only for the protection of anadromous fish.

WARM - Warm Freshwater Habitat: Includes uses of water that support warm water ecosystems including, but not limited to, preservation or enhancement of aquatic habitats, vegetation, fish or wildlife, including invertebrates.

SHELL - Shellfish Harvesting: Includes uses of water that support habitats suitable for the collection of filter-feeding shellfish (e.g., clams, oysters and mussels) for human consumption, commercial, or sport purposes.

MUN - Municipal and Domestic Supply: Includes use of water for community, military, or individual water supply systems including, but not limited to, drinking water supply.

AGR - Agricultural Supply: Includes use of water for farming, horticulture, or ranching including, but not limited to, irrigation, stock watering, or support of vegetation for range grazing.

PROC - Industrial Process Supply: Includes uses of water for industrial activities that depend primarily on water quality.

FRSH - Freshwater Replenishment: Includes uses of water for natural or artificial maintenance of surface water quantity or quality (e.g., salinity).

GWR - Ground Water Recharge: Includes uses of water for natural or artificial recharge of ground water for purposes of future extraction, maintenance of water quality, or halting of saltwater intrusion into freshwater aquifers.

Impaired Water Bodies

Under Section 303(d) of the Clean Water Act, states, territories and authorized tribes are required to develop a list of water quality limited segments. The waters on the list do not meet water quality standards, even after point sources of pollution have installed the minimum required levels of pollution control technology. The law requires that these jurisdictions establish priority rankings for waters on the lists and develop action plans, called Total Maximum Daily Loads (TMDLs), to improve water quality (40 CFR 130.7(b), 33 USC section 1313(b)). The list is known as the Section 303(d) list of impaired waters.

The proposed project is not directly tributary to a 2006 303(d) listed water body. The closest downstream impaired water body is the San Diego Bay, HSA 910.10, which is listed for PCBs (Polychlorinated biphenyls).

Watershed Pollutants of Concern

The proposed project is located within the Otay Watershed Watershed. According to the Otay Watershed Urban Runoff Management Program, the pollutants of concern for the watershed are coliform bacteria, trace metals and other toxic constituents.

Target Pollutants

Taking into account the watershed pollutants of concern, the proximity of the impaired water bodies and environmentally sensitive areas, and the potential pollutants from the proposed development, there are no primary target pollutants for this project. Note that PCBs are not considered primary target pollutants for this project, since they are not an anticipated project pollutant, as PCBs have been banned since 1979. Secondary pollutants of concern include the rest of the anticipated and potential pollutants as identified in Table 1, which are sediments, nutrients, organic compounds,

metals, trash and debris, oxygen demanding substances, oil and grease, bacteria and viruses, and pesticides.

Hydrologic Conditions of Concern

A drainage study including a field reconnaissance was conducted by a California Registered Civil Engineer (RCE) to identify the conditions of concern for this project. The drainage calculations are available in the project drainage report, provided under a separate cover. The following is a summary of the conclusions from the study:

- Drainage Patterns: Under existing conditions, runoff generally drains towards 8th Street. Approximately half of the site drains to the Alley along the site's southerly boundary and enters a grate inlet near the alley's intersection with 8th Street. The other portion of the site drains via surface flow to a low point near the northerly property boundary along the extension of the 8th Street alignment. Because the existing underground storm drain system is undersized, portions of the site and some upstream properties currently experience flooding during storm events.

  Under proposed conditions, runoff from the site will be collected in an onsite private storm drain system that will drain into the public backbone storm drain pipe. The existing backbone storm drain through the site will be upsized to ensure the proposed drainage condition is improved from the existing condition. The existing 15-inch line that collects the drainage from 9th Street will be replaced and realigned with a larger diameter pipe.

- Soil Conditions and Imperviousness[2]: The hydrological characteristics of the majority of the site soil type can be classified as being within soil group D, as defined by the Natural Resources Conservation Service. Type D soils have a very slow infiltration rate when thoroughly wetted; they are chiefly clays that have a high shrink-swell potential, or soils that have a high permanent water table, or soils that have a claypan or clay layer at or near the surface, or soils that are shallow over nearly impervious material. Under existing conditions, the project area is approximately 85% impervious with a runoff coefficient of 0.82. Under

[2] Based on Land Use Criteria Table 3-1 from the County of San Diego Hydrology Manual, June 2003

the proposed conditions, the project area will be approximately 85% impervious and the overall runoff coefficient is expected to be 0.82.

- Hydromodification Element: Under the municipal permit, the project is exempt from the Final Hydromodification Criteria because it discharges into underground storm drains discharging directly to the San Diego Bay/Pacific Ocean. In addition, the project does not propose to increase the imperviousness relative to the existing condition of the site.

- Downstream Conditions: The existing 36-inch storm drain downstream of the site is currently undersized. The existing peak 100-year flow would surcharge the existing 36-inch storm drain and excess runoff would flow overland starting at the F-type catch basin located to the north of the CVS pharmacy that is located on the north side of Palm Avenue. The runoff drains to the north and eventually discharges to the San Diego Bay.

4. STORM WATER BEST MANAGEMENT PRACTICES

The Imperial Beach Municipal Code, Storm Water Standards requires the implementation of applicable source control BMPs, low impact development (LID) BMPs, and treatment control BMPs.

Source Control BMPs

Source control BMPs reduce the potential for urban runoff to pick up and transport pollutants. They are defined as any administrative action, design of a structural facility, usage of alternative materials, and operation, maintenance, and inspection procedures that eliminate or reduce urban runoff pollution. Table 4 addresses the source control BMPs required by the City according to Storm Water Standards (Chapter 8.32.190). The applicability of each source control BMP for the Breakwater Project is noted in the table and is discussed in narrative form in the last column.

TABLE 4. SOURCE CONTROL BMPS

	Included		
Specific BMP	**Yes**	**No**	**Explanation of how BMP was included or why it was not included**
Maintenance Bays			
Maintenance bays shall include at least one of the following: • Repair/ maintenance bays shall be indoors; or, • Drainage system designed to preclude urban run-on and runoff. Maintenance bays shall include a repair/maintenance bay drainage system to capture all wash water, leaks, and spills. Drains shall be connected to a sump for collection and disposal. Direct connection of the repair/maintenance bays to the storm water conveyance system is prohibited.		No	No maintenance bays are proposed on this project.

Specific BMP	Included		Explanation of how BMP was included or why it was not included
	Yes	No	
Vehicle and Equipment Wash Areas			
Areas for washing/steam cleaning of vehicles and areas for outdoor equipment/accessory washing and steam cleaning shall be: • Self-contained to preclude run-on and run-off, covered with a roof or overhang, and equipped with a clarifier or other pretreatment facility; and • Properly connected to a sanitary sewer.		No	No wash areas proposed.
Outdoor Processing Areas			
Outdoor processing areas shall: • Cover or enclose areas that would be the most significant source of pollutants; • Slope the area toward a dead-end sump; or • Discharge to the sanitary sewer system. Berms or site grading shall be utilized to prevent run-on from surrounding areas. Installation of storm drains in areas of equipment repair is prohibited.		No	No outdoor processing areas proposed.
Retail and Non-Retail Fueling Areas			
Retail and non-retail fueling areas shall be: • Paved with Portland cement concrete or equivalent smooth impervious surface (asphalt concrete is prohibited); • Designed to extend 6.5 feet (2.0 meters) from the corner of each fuel dispenser, or the length at which the hose and nozzle assembly may be operated plus 1 foot (0.3 meter), whichever is less; • Sloped to prevent ponding; • Separated from the rest of the site by a grade break that prevents run-on of adjacent urban runoff; and • Designed to drain to the project's treatment control BMP(s) prior to discharging to the storm water conveyance system. The overhanging roof structure or canopy shall be: • Equal to or greater than the area within		No	No fueling areas proposed.

Specific BMP	Included		Explanation of how BMP was included or why it was not included
	Yes	No	
the fuel dispensing area's grade break; and • Designed to drain away form the fuel dispensing area.			
Steep Hillside Landscaping			
Steep hillside areas disturbed by project development shall be landscaped with deep-rooted, drought tolerant and/or native plant species selected for erosion control, in accordance with the Landscape Technical Manual.		No	No steep hillside areas exist onsite.
Use Efficient Irrigation Systems & Landscape Design			
Priority projects shall design the timing and application methods of irrigation water to minimize the runoff of excess irrigation water into the stormwater conveyance system. The following methods to reduce excessive irrigation runoff shall be considered, and incorporated and implemented where determined applicable and feasible by the Director of Community Services (detached residential homes may be exempted from these measures by the Community Development Director as long as the project design includes methods to minimize runoff): • Employing rain shutoff devices to prevent irrigation after precipitation. • Designing irrigation systems to each landscape area's specific water requirements. • Using flow reducers or shutoff valves triggered by a pressure drop to control water loss in the event of broken sprinkler heads or lines. • Employing other comparable, equally effective, methods to reduce irrigation water runoff. (Ord. 2010-1112 § 1)	Yes		All of the efficient irrigation methods included to the left will be included in the project, as applicable to the project.

Specific BMP	Included		Explanation of how BMP was included or why it was not included
	Yes	No	
Design Trash Storage Areas to Reduce Pollution Contribution			
All trash storage areas shall meet the following requirements (limited exclusion: detached residential homes): • Paved with an impervious surface, designed not to allow run-on from adjoining areas, screened or walled to prevent off-site transport of trash; and • Provide trash containers with attached lids that exclude rain, or provide a roof or awning over storage areas to minimize direct precipitation intrusion. (Ord. 2010-1112 § 1)	Yes		Trash areas will be designed as required.
Design Outdoor Material Storage Areas to Reduce Pollution Contribution			
Materials with the potential to contaminate urban runoff shall be: • Placed in an enclosure such as a cabinet, shed, or other structure that prevents contact with rainfall or runoff and prevents spillage to the storm water conveyance system, and • Protected by secondary containment structures such as berms, dikes, or curbs when the material storage area includes hazardous materials. The storage area shall be paved and sufficiently impervious to contain leaks and spills and be covered by a roof or awning to minimize direct precipitation within the secondary containment area.		No	No material storage areas are proposed.
Design Loading Docks to Reduce Pollution Contribution			
Loading docks areas shall: • Provide overhead cover where appropriate to prevent precipitation contact with debris and potential spills, and • Isolate drainage in the loading dock area through the use of paved berms and/or grade breaks to prevent adjacent runoff from entering the loading area and to	Yes		Loading docks will be designed to minimize runon. An inlet insert (or other treatment BMP) will be provided to treat runoff from the loading dock.

Specific BMP	Included		Explanation of how BMP was included or why it was not included
	Yes	No	
prevent liquid spills from discharging from the loading area. • Include an acceptable method of spill containment such as a shut-off valve and containment areas.			
Employ Integrated Pest Management Principles			
Integrated pest management (IPM) is an ecosystem-based pollution prevention strategy that focuses on long-term prevention of pests or their damage through a combination of techniques such as: • Biological control • Habitat manipulation • Use of resistant plant varieties Pesticides are used only after monitoring indicates they are needed according to established guidelines. Pest control materials are selected and applied in a manner that minimizes risks to human health, beneficial and non-target organisms, and the surrounding environment. More information regarding pesticide application may be obtained at the following University of California-Davis website: http://www.ipm.ucdavis.edu/WATER/U/index.html. To eliminate or reduce the need for pesticide use, the following strategies can be used: • Plant pest-resistant or well-adapted plant varieties • Discourage pests by modifying the site and landscaping design IPM educational materials should be distributed to future site residents and tenants. These educational materials should address the following: • Use of barriers, screens, and caulking to keep pests out of buildings and landscaping	Yes		IPM educational materials on how to control pests using non-toxic methods are available in Appendix 3. Only professional pest controllers will be used for the application of pesticides.

Specific BMP	Included		Explanation of how BMP was included or why it was not included
• Physical pest elimination techniques, such as weeding, washing, or trapping pests • Relying on natural enemies to eliminate pests • Proper use of pesticides as a last line of defense			
Provide Storm Water Conveyance System Stamping and Signage			
• Concrete stamping, or approved equivalent method, shall be provided for all storm water conveyance system inlets and catch basins within the project area. • Language associated with the stamping (e.g., "No Dumping – I Live in San Diego Bay") must be satisfactory to the City Engineer. Stamping may also be required in Spanish. • Post signs and prohibitive language (with graphical icons) which prohibit illegal dumping at trailheads, parks, building entrances and public access points along channels and creeks within the project area. • Maintain legibility of stencils and signs throughout the life of the project. • Provide stormwater pollution prevention information to new site owners, lessees, or operators. • Include the following in lease agreements: "Tenant shall not allow anyone to discharge anything to storm drains or to store or deposit materials so as to create a potential discharge to storm drains." (Ord. 2010-1112 § 1)	Yes		All storm drain inlets or catch basins onsite will be marked as required by the City.
Manage Fire Sprinkler System Discharges			
For new buildings with fire sprinkler systems, design fire sprinkler systems as follows: • Contain discharges from sprinkler	Yes		Fire sprinkler discharges will drain to the sanitary sewer system.

Specific BMP	Included		Explanation of how BMP was included or why it was not included
systems' operational maintenance and testing and convey discharges to the sanitary sewer system			
Manage Air Conditioning Condensate			
Air conditioning condensate is a source of dry-weather runoff and elevated copper levels. Include design features to manage this pollutant source, including the following: • Direct air conditioning condensate to the sanitary sewer system • Direct air conditioning condensate to landscaping areas	Yes		Air conditioning condensate will be drained to the sanitary sewer system or to landscaping areas.
Use Non-Toxic Roofing Materials Where Feasible			
• Avoid the use of galvanized steel or copper for roofs, gutters, and downspouts • If using such materials, reduce the potential for leaching of metals by applying a coating or patina • Avoid composite roofing materials that contain copper	Yes		Buildings will use non-toxic roofing materials.

Priority Development Project (PDP) LID BMPs

The City Storm Water Municipal Code (Section 8.32.240) requires priority projects to incorporate LID components, which include features that attempt to mimic natural hydrologic conditions for the water quality design storm. Each of the LID principles identified in the Storm Water Standards are listed below followed by a description of how the principle is addressed in the project design.

LID Principle 1: Minimize Project's Impervious Footprint and Conserve Natural Areas

The site layout was optimized by minimizing the project's impervious footprint. Drive aisles, sidewalks, and parking stall dimensions were designed by balancing the goal of minimizing impervious area while still maintaining a walkable environment for pedestrians. The proposed landscaping site plan includes drought tolerant trees and other vegetation in order to maximize

canopy interception and water conservation. The LID principle of conserving natural areas does not apply to this project since it is a redevelopment project and therefore there are no natural areas to preserve.

LID Principle 2: Minimize Directly Connected Impervious Areas (DCIAs)

The site area has been designed to minimize directly connected impervious areas by incorporating vegetative BMPs into the site design to treat the runoff from a portion of the site, including the roof drains from Buildings C, D, F, and G some of the hardscape areas. For more information, refer to the Treatment BMP section below.

In addition to the general LID principles outlined above, the discussion below outlines the specific LID BMPs identified in Storm Water Standards Municipal Code Chapter 8.32.240. The applicability of each LID BMP is discussed in relation to the project.

- Mimicking a site's natural hydrologic regime can be pursued by reducing imperviousness, conserving natural resources and areas, maintaining and using natural drainage courses in the stormwater conveyance system, and minimizing clearing and grading.
    - Applicability to the project: The project does not include minimization of grading or the conservation of natural areas or drainage courses, as these BMPs are not applicable to redevelopment sites. The site does reduce the imperviousness slightly compared with existing conditions.
- Provide runoff storage measures dispersed uniformly throughout a site's landscape with the use of a variety of detention, retention, and runoff practices.
    - Applicability to project: This BMP is not applicable to the project, as it is a redevelopment project.
- Implementing on-lot hydrologically functional landscape design and management practices.
    - Applicability to project: The project includes natural BMPs, which include functional landscape components.
- Drain a portion of impervious areas (rooftops, parking lots, sidewalks, walkways, patios and similar areas of impervious surface) into pervious areas prior to discharge to the MS4. The amount of runoff from impervious areas shall correspond with the total capacity of the project's pervious areas to infiltrate or treat runoff, taking into consideration the pervious area's soil conditions, slope, and other pertinent factors.
    - Applicability to project: The project incorporates this LID principle with the bioretention area and vegetated swale. Both BMPs are designed to disconnect impervious areas.

- For priority development projects with low traffic areas and appropriate soil conditions, construct a portion of walkways, trails, overflow parking lots, alleys, or other low-traffic areas with permeable surfaces, such as previous concrete, porous asphalt, unit pavers, and granular materials.
    - Applicability to project: This LID BMP is not incorporated into the site plan, as it is not applicable, since all areas will be high-traffic areas.
- Conserve natural areas, including existing trees, other vegetation, and soils.
    - Applicability to project: This LID BMP is not incorporated into the site plan, as it is not applicable, since the project is a redevelopment project.
- Construct streets, sidewalks, or parking lot aisles to the minimum widths necessary, provided that public safety and a walkable environment for pedestrians are not compromised.
    - Applicability to project: This LID BMP is incorporated into the site plan, and sidewalks have been reduced.
- Minimize the impervious footprint of the project.
    - Applicability to project: The site does reduce the imperviousness slightly compared with existing conditions.
- Minimize soil compaction.
    - Applicability to project: This LID BMP is not incorporated into the site plan, as it is not applicable, since the project is a redevelopment project.
- Minimize disturbances to natural drainages (e.g., natural swales, topographic depressions and similar land features).
    - Applicability to project: This LID BMP is not incorporated into the site plan, as it is not applicable, since the project is a redevelopment project.

Treatment Control BMPs

According to the Storm Water Standards Municipal Code (Chapter 8.32.330), structural treatment facilities are required to remove pollutants contained in storm water runoff. Target pollutants, removal efficiencies, expected flows, and space availability determine the selection of structural treatment BMP options. The proposed BMPs shall be selected to mitigate the secondary pollutants of concern, which are sediments, nutrients, organic compounds, metals, trash and debris, oxygen

demanding substances, oil and grease, bacteria and viruses, and pesticides. Refer to Table 5 for the description of how easily each pollutant is removed by various treatment processes.

TABLE 5. GROUPING OF POTENTIAL POLLUTANTS OF CONCERN BY FATE DURING STORMWATER TREATMENT

Pollutant	Coarse Sediment and Trash	Pollutants that Tend to Associate With Fine Particles During Treatment	Pollutants that Tend to Be Dissolved Following Treatment
Sediment	X	X	
Nutrients		X	X
Heavy Metals		X	
Organic Compounds		X	
Trash and Debris	X		
Oxygen Demanding		X	
Bacteria		X	
Oil and Grease		X	
Pesticides		X	

Source: "Table 3. Grouping of Potential Pollutants of Concern by Fate During Stormwater Treatment." City of Imperial Beach Stormwater Standards, Municipal Code Chapter 8.32.200

Based on the typical removal efficiencies of the target pollutants, the treatment BMP options to consider include infiltration trenches and/or basins, retention/irrigation, wet ponds, constructed wetlands, extended detention basins, vegetated swales and/or buffer strips, biofiltration, and media filtration, in accordance with Table 6 below, which is a selection matrix for structural treatment BMPs based on target pollutants and removal efficiencies.

TABLE 6. STRUCTURAL BMP SELECTION MATRIX

Pollutants of Concern	Bioretention Facilities (LID)	Settling Basins (Dry Ponds)	Wet Ponds and Constructed Wetlands	Infiltration Facilities or Practices (LID)	Media Filters	Higher-rate biofilters	Higher-rate media filters	Trash Racks and Hydro-dynamic Devices	Vegetated Swales
Coarse Sediment and Trash	High	High	High	High	High	High	High	High	High
Pollutants that Tend to Associate With Fine Particles During Treatment	High	High	High	High	High	Medium	Medium	Low	Medium
Pollutants that Tend to Be Dissolved Following Treatment	Medium	Low	Medium	High	Low	Low	Low	Low	Low

Source: "Table 4. Groups of Pollutants and Relative Effectiveness of Treatment Facilities." City of Imperial Beach Stormwater Standards, Municipal Code Chapter 8.32.200

Selected Treatment Control BMP(s)

One bioretention area, one vegetated swale, one baffle box, and various inlet inserts are the selected treatment BMPs for this project. The Project Team will refine the proposed BMP strategy during final design. Information for the selected BMPs can be found in Appendices 4 and 5. The selected treatment control BMPs are preliminary in nature due to the early architectural design stage of this project.

Justification for Selected Treatment Control BMP(s)

Multiple types of BMPs were selected in order to fit within the site constraints of the project, but the intent of the BMP selection was to maximize treatment and incorporate LID BMPs where possible. A proposed bioretention area was sited in the northwest corner of the site to treat the roof runoff from Buildings F and G and a portion of the parking lot. A vegetated swale is proposed to treat the

runoff from Buildings C and D. The balance of the western two-thirds of the site is treated with a proposed underground baffle box, located upstream of the connection to the public storm drain system. The eastern third of the site will be treated via inlet inserts before connection to the proposed 36-inch public storm drain. Multiple treatment BMPs are necessary due to the site grading constraints. Since offsite runon drains through the project, onsite flows are treated prior to commingling with offsite runoff. Although the baffle box and inlet inserts are not rated for high pollutant removal, higher-rated BMPs are not feasible to treat the runoff at these discharge locations, and therefore the project satisfies the "maximum extent practicable" criteria. For example, retention/irrigation, wet ponds, or extended detention basins are infeasible for the project due to minimum drainage area constraints. Infiltration trenches and/or basins are infeasible for the project due to geotechnical concerns with regards to proximity of building foundations and retaining walls. Media filtration, due to its inherent high head loss requirements, is impractical for the site due to the high backwater conditions within the onsite storm drain system. Although a bioretention and a vegetated swale is proposed for the project, they cannot be used to treat the runoff from the entire site (due to their distributed nature of being small-scale controls). Bioretention and vegetated swales are not ideal BMP choices for the drainage areas along the southern perimeter, as these drainage areas have low points against a retaining wall by virtue of the grading design constraints for the site development. Therefore, these drainage areas will be treated mechanically through baffle box or inlet inserts.

Treatment Train Summary

The project BMP strategy includes a treatment train approach. The site source controls will reduce the potential for urban runoff to pick up and transport pollutants. The LID BMPs will treat runoff through natural treatment processes. The treatment BMPs will treat runoff from site storm drain discharge locations prior to offsite discharge.

BMP Plan Assumptions

The following assumptions were made in calculating the required BMP sizes:

- Only flows generated onsite will be treated. All offsite flow treatment will be the responsibility of the upstream owners.

- For conservative sizing purposes, the runoff factor for the drainage area to the bioretention area was assumed to be 1.0. A runoff coefficient, 'C' value, of 0.82 was used in the runoff calculations for the rest of the BMPs.

- BMP Design Constraints
    - Locate BMPs in order to not impact operations
    - Facilitate access for maintenance
    - Avoid utility conflicts

Table 7 summarizes the criteria that should be implemented in the design of the recommended project BMPs.

TABLE 7. NUMERIC SIZING TREATMENT STANDARDS

BMP Hydrology	BMP Option	BMP Treated Flow Capacity	Project Treatment Criteria
C = runoff coefficient I = water quality treatment intensity A = acreage **Flow-based: Q=CIA**	Bio Clean High Capacity Curb Inlet Basket #1	11.7 cfs	C = 0.82 I = 0.2 in/hour* A = 0.33 acres **Q = 0.05 cfs**
C = runoff coefficient I = water quality treatment intensity A = acreage **Flow-based: Q=CIA**	Bio Clean High Capacity Curb Inlet Basket #2	11.7 cfs	C = 0.82 I = 0.2 in/hour* A = 0.55 acres **Q = 0.09 cfs**
C = runoff coefficient I = water quality treatment intensity A = acreage **Flow-based: Q=CIA**	Bio Clean High Capacity Curb Inlet Basket #3	11.7 cfs	C = 0.82 I = 0.2 in/hour* A = 0.30 acres **Q = 0.05 cfs**

C = runoff coefficient I = water quality treatment intensity A = acreage **Flow-based: Q=CIA**	Bio Clean High Capacity Curb Inlet Basket #4	11.7 cfs	C = 0.82 I = 0.2 in/hour* A = 0.36 acres **Q = 0.06 cfs**
C = runoff coefficient I = water quality treatment intensity A = acreage **Flow-based: Q=CIA**	Bio Clean High Capacity Curb Inlet Basket #5	11.7 cfs	C = 0.82 I = 0.2 in/hour* A = 0.06 acres **Q = 0.01 cfs**
C = runoff coefficient I = water quality treatment intensity A = acreage **Flow-based: Q=CIA**	Bioclean Baffle Box #1 NSBB 4-8-84	1.07 cfs	C = 0.82 I = 0.2 in/hour* A = 2.9 acres **Q = 0.48 cfs**
C = runoff coefficient I = water quality treatment intensity A = acreage **Flow-based: Q=CIA**	Vegetated Swale #1	2009 Countywide SUSMP Sizing Rule based on calculated residence time **See calculations in Appendix 4**	C = 0.82 I = 0.2 in/hour* A = 0.44 acres **Q = 0.07 cfs**
C = runoff coefficient I = water quality treatment intensity A = acreage **Flow-based: Q=CIA**	Bioretention Area #1	2009 Countywide SUSMP Sizing Rule (Flow-based): Min. bioretention area = 0.04 times tributary impervious area (adjusted by runoff factor)	**See calculations in Appendix 4**

* Based on the Municipal Storm Water Permit (Order No. R9-2007-0001) Section D.1.d.(6)(c)

5. PROJECT BMP PLAN IMPLEMENTATION

This section identifies the recommended BMP options that meet the applicable storm water and water quality ordinance requirements.

Construction BMPs

Construction is a dynamic operation where changes are expected. Storm water BMPs for construction sites are usually temporary measures that require frequent maintenance to maintain their effectiveness and may require relocation, revision and reinstallation, particularly as project grading progresses. During construction, BMPs such as desilting basins, silt fences, gravel bags, fiber rolls, and other erosion control measures will be employed consistent with the NPDES General Permit for Storm Water Discharges Associated with Construction Activity. Water quality during construction will be protected by the Storm Water Pollution Prevention Plan (SWPPP) prepared for Breakwater, which will be kept onsite and updated as required for compliance. The objectives of the SWPPP are to:

- Identify all pollutant sources, including sources of sediment that may affect the water quality of storm water discharges associated with construction activity from the construction site;
- Identify non-storm water discharges;
- Identify, construct, implement in accordance with a time schedule, and maintain BMPs to reduce or eliminate pollutants in storm water discharges and authorized non-storm water discharges from the construction site during construction; and
- Document the inspection and maintenance of the BMPs installed during construction and monitor their effectiveness.

Recommended Post-Construction BMP Plan

PDC has identified a water quality BMP plan for the Breakwater Project. The following post-construction BMP plan is preliminary and is subject to change pending City review, implementation of future policy requirements, and final engineering design.

The recommended post-construction BMP plan includes LID, source control, and treatment control BMPs. The LID BMP options include minimization of impervious footprint and minimization of directly connected impervious areas. The source control BMPs include protective trash storage design, efficient irrigation and landscape design, storm water conveyance system stenciling and signage, protective loading dock design, integrated pest management principles, management of fire sprinkler discharges and air conditioning condensate discharges, and the use of non-toxic roofing materials.. The treatment BMPs selected for this project are one bioretention area, one vegetated swale, one baffle box, and various inlet inserts.

Operation and Maintenance Plans

The City Municipal Code requires a description of the long-term maintenance requirements of proposed BMPs and a description of the mechanism that will ensure ongoing long-term maintenance. The project proponent will include a Maintenance Agreement Package, prepared satisfactory to the City. The Maintenance Agreement and the Operation and Maintenance (O&M) requirements for the selected post-construction BMPs for Breakwater are included in Appendix 5. The Maintenance Agreement Package will describe: the designated responsible party to manage the storm water BMPs, the employee's training program and duties, the operating schedule, the maintenance frequency, the routine service schedule, specific maintenance activities, and any other necessary activities. Provisions will be included in the maintenance agreement prohibiting the outdoor use of materials containing pollutants of concern. The maintenance agreement will require Breakwater to provide inspection and servicing of all permanent treatment BMPs on an annual basis at a minimum. Parties responsible for the O&M plan will complete and maintain O&M forms to document all maintenance requirements and will retain the records for at least five years. These documents will be made available to the City for inspection upon request at any time. The Project BMP costs and the maintenance funding sources are provided in the following section.

6. PROJECT BMP COSTS AND FUNDING SOURCES

Table 8 below provides the anticipated capital and annual maintenance costs for the recommended/selected BMPs.

TABLE 8. BMP COSTS

BMP Option	Estimated Capital Cost + Installation (Total)	Approximate Annual Maintenance Cost
Bioretention area	$20 per square foot	$350 per acre of bioretention area [2]
Grass swale	$0.75 per square foot	$350 per acre of grass swale [2]
Bio Clean High Capacity Curb Inlet Basket	$845 each [1]	$280 per inlet (if cleaned quarterly)
Bio Clean Nutrient Separating Baffle Box NSBB 4-8-84	$20,000 [1]	$1200

(1) A proprietary BMP may vary in cost at the manufacturer's discretion.
(2) Annual maintenance costs are incorporated into the annual landscaping maintenance costs.

The Developer will incur the capital cost for the BMP installation. The responsible party for long-term maintenance and funding is the Building Owner's Association (BOA) for Breakwater. The Building Owners Association (BOA) for Breakwater will enter into a Maintenance Agreement with the City, obliging the Building Owners Association (BOA) for Breakwater to maintain, repair, and replace the storm water BMPs as necessary into perpetuity. A copy of the Maintenance Agreement is in Appendix 5.

APPENDIX 1

Storm Water Requirements Applicability Checklist

Form 7-A
City of Imperial Beach
Storm Water Requirements Applicability Checklist for Building, Grading, and Encroachment Permits

Location of Proposed Project	Permit Type (Building, Grading, or Encroachment)
9th St + Palm Ave	
Owner Name	**Contractor**
City of Imperial Beach	

A. Site Slope	B. Disturbed Area of Proposed Project
☐ < 3% (1) ☑ 3% - 5% (3) ☐ > 5% (5)	☐ < 5,000 ft² (1) ☐ 5,000 - 20,000 ft² (5) ☐ 20,000 ft² - 1 acre (10) ☑ > 1 acre (15)
C. Receiving Water Body	**D. Distance from Receiving Water Body**
☐ Otay River (5) ☐ Tijuana River (5) ☐ Pacific Ocean (5) ☐ Tijuana Estuary (5) ☑ San Diego Bay (5)	☐ > 1 mile (1) ☑ 200 ft. - 1 mile (3) ☐ < 200 ft. (5) ☐ Direct discharge or adjacent (10)

E. Soil Erosion Potential (Which of the following statements best describes your project?)

- ☐ No grading, sub-surface extractions, or outside demolition/building activities will occur (1)
- ☐ Less than 50% of the site will be graded at any one time and all outside building, demolition, and earthwork will occur between May 1 and September 30 (5)
- ☐ Greater than 50% of the site will be graded at any one time and all outside building, demolition, and earthwork will occur between May 1 and September 30 (10)
- ☐ Less than 50% of the site will be graded at any one time and outside building, demolition, or earthwork will occur between October 1 and April 30 (10)
- ☑ Greater than 50% of the site will be graded at any one time and outside building, demolition, and earthwork will occur between October 1 and April 30 (15)

F. Potential for Non-Stormwater Discharges	Site Prioritization Formula (A+B+(C*D)+E+F)
☐ Site is fully contained (0) ☑ BMPs proposed to prevent/control non-storm water discharges (1) ☐ Sources of non-stormwater discharges observed without BMPs implemented, but no discharges (3) ☐ Observed/known non-stormwater discharge (5)	☑ > 45 = HIGH PRIORITY ☐ 35 – 45 = MEDIUM PRIORITY ☐ < 35 = LOW PRIORITY *High priority sites will be subject to weekly construction-phase stormwater BMP inspections between October 1 and April 30.* *Medium and low priority sites will be subject to a minimum of two construction-phase stormwater BMP inspections between October 1 and April 30.* *All sites will be subject to construction-phase stormwater BMP inspections as necessary throughout the year.*

Complete Sections A, B, & C of the following checklist to determine your project's construction-phase and permanent, post-construction stormwater best management practice (BMP) requirements.

Section A - Construction-Phase Storm Water BMP Requirements

If the answer to Question A.1 below is "YES", your project is subject to the General Permit for Discharges of Storm Water Associated with Construction Activity issued by the State Water Resources Control Board. You must prepare a Storm Water Pollution Prevention Plan (SWPPP) pursuant to the requirements of that permit. If the answer is "NO", but the answer to any of the remaining questions is "YES", you must complete Form 7-B (Stormwater Management Plan Instructions to Accompany All Construction, Grading, and Encroachment Permit Applications) to indicate which construction-phase BMPs will be implemented as part of your project.

	YES	NO
1. Will your proposed project disturb one or more acres of soil? Or is it part of a larger common plan of development that in total disturbs one or more acres of soil?	✓	
2. Does the project propose grading or soil disturbance?	✓	
3. Would stormwater or urban runoff have the potential to contact any portion of the construction area?	✓	
4. Would the project use any construction materials that could negatively affect water quality if discharged from the site (such as paints, solvents, concrete, stucco, etc.)?	✓	

Section B - Permanent Stormwater BMP Requirements

If your proposed project fits one or more of the "Priority Project Categories" below, you are subject to the requirements of Imperial Beach Municipal Ordinance Chapter 8.32, and must prepare, and submit for approval, a Standard Urban Storm Water Mitigation Plan (SUSMP) prior to permit issuance.

Priority Project Categories	YES	NO
1. Detached Residential Development of 10 or more units		✓
2. Attached Residential Development of 10 or more units		✓
3. Commercial Development greater than 100,000 square feet	✓	
4. Automotive Repair Shop		✓
5. Restaurant	✓	
6. Hillside Development greater than 5,000 square feet		✓
7. Project discharging to receiving waters within Environmentally Sensitive Areas		✓
8. Parking Lots greater than or equal to 5,000 square feet or with at least 15 parking spaces and potentially exposed to urban runoff	✓	
9. Streets, Roads, Highways & Freeways which would create a new paved surface that is 5,000 square feet or greater	✓	
10. Significant Redevelopment projects over 5,000 square feet	✓	

Limited Exclusion: Trenching and resurfacing work associated with utility projects are not considered priority projects. Parking lots, buildings and other structures associated with utility projects are priority projects if one or more of the criteria in Part C is met.

Name of Owner or Agent ***(Please Print):*** **Title:**

Signature: **Date:**

Form 7-B
City of Imperial Beach
Storm Water Management Plan Instructions to Accompany All Construction, Grading & Encroachment Permit Applications

In order to comply with the federal Clean Water Act, the state Water Code and City of Imperial Beach Ordinances, the City of Imperial Beach requires that property owners complete a Storm Water Management Plan prior to issuance of any Construction/Grading/Encroachment Permit. The purpose of a Storm Water Management Plan is to document Best Management Practices (BMPs) that will be implemented to prevent pollutants (including sediment) from entering storm water conveyances and receiving waters. The Storm Water Management Plan becomes a part of the Construction/Grading/ Encroachment Permit and is subject to enforcement by City of Imperial Beach inspectors and others.

Storm Water Management Plans include the elements described in the following sections:

Section 1: Required Information - This section is used to provide the City of Imperial Beach with basic information necessary to evaluate and prioritize project activities. Each of the items in this section must be completed, except projects with less than 1 acre of disturbed area are not required to have a Waste Discharge Identification Number (WDID). Grading projects with a disturbed area of 1 acre or greater must also meet additional requirements from the State Water Resources Control Board (SWRCB). Those additional requirements include filing a Notice of Intent (NOI) and preparation of a Storm Water Pollution Prevention Plan (SWPPP).

Please note that watercourses and waterbodies include ephemeral drainages (i.e., those that are dry during part of the year).

Section 2: Best Management Practices - Best Management Practices (BMPs) must be selected and implemented to prevent erosion and construction-related materials, sediment, wastes and spills from entering Storm Water conveyances and receiving waters.

Note: It is the responsibility of the property owner and the contractor to determine the types of BMPs that will be used, as well as the levels of application necessary to comply with the City of Imperial Beach's Storm Water and Construction/Grading/Encroachment Ordinances. Failure to prevent soil erosion and discharges of sediment and other pollutants from construction sites is subject to enforcement by the City or others. At a minimum, the City requires that the BMPs listed in Table A (attached) be installed and maintained for all grading projects. Additional BMPs listed in Table B (attached) may also be required in correlation to a project's scope, potential for discharges and proximity to a watercourse or other receiving waters.

Section 3: Certification - The property owner must sign this section certifying that they understand the City's minimum requirements for Storm Water management of construction activities and will implement, monitor and maintain the selected BMPs to ensure their effectiveness.

Copies of the BMPs can be found at the Permit Counters. The Manual includes all of the referenced BMPs listed in Tables A and B and from the *Caltrans Storm Water Quality Handbooks*, *California Storm Water BMP Handbook for Construction*, and *National Menu of BMPs*. The entire set of Caltrans manuals may also be ordered directly from the following source:

Caltrans Manuals
Caltrans Publications unit
(916)445-3520
(916)324-8997 Fax

City of Imperial Beach
Storm Water Management Plan

This form must be submitted with all Construction/Grading Permit Applications.

SECTION 1. Required Information

Construction/Grading Permit Application Number:		Project Name:	
Name of Project Contact Person:		Project address or location:	
Title:	Phone #:		APN #:
Construction/Grading start date:	Construction/Grading finish date:	Project start date:	Project finish date:

Estimated amount of disturbed acreage:_____ acres (If equal to or greater than 5 acres, you must also provide a WDID number from the SWRCB.) WDID_____

Are there any watercourses or waterbodies within 50 feet of the limits of soil disturbance? YES _____ NO _____

Does the soil type have high erosion potential (fine grain soil like sand, silt, fine disintegrated granite) ? YES _____ NO _____

Does the project site have or propose slopes higher than 25 feet or steeper than 1:1? YES ____ NO _____

Best Management Practices – The goal of Storm Water management planning is to reduce pollution to the maximum extent practicable by implementing Best Management Practices (BMPs). There are five categories of BMPs: 1) Erosion control practices, and; 2) Velocity reduction, and; 3) Sediment control practices, and; 4) Offsite sediment tracking control, and; 5) General site and materials management. BMPs from each of the five categories must be used together as a system in order to prevent erosion, sediment, wastes, spills, and residues from leaving the site. When properly implemented, monitored and maintained, BMPs will function to prevent pollutants (including sediment) from leaving the site. It is the responsibility of the property owner and the contractor to determine the types of BMPs that will be used, as well as the levels of application necessary to comply with the City's Storm Water and Construction/Grading Ordinances.

Best Management Practice Tables – Tables A and B (attached) must be used to indicate those BMPs that will be used to prevent Storm Water pollution. At a minimum, the City requires that the BMPs listed in Table A be installed on all grading projects. However, some BMPs may not be applicable to every project. For example, if storm drain inlets are not present, then Storm Drain Inlet Protection (BMP SC10) would not be applicable.

Construction/Grading Plan Best Management Practice Checklist – The following information shall be shown on the Construction/Grading plans:

- ❑ The project boundaries.
- ❑ The footprint of any existing structures and facilities.
- ❑ The footprint of all structures and facilities to be constructed.
- ❑ The limits of grading.
- ❑ The existing and proposed grades of the site, along with any intermediate grades that will significantly affect site drainage patterns.
- ❑ The location(s) where runoff from the site may enter storm drain(s), channel(s), and/or receiving waters.

The following certification must be signed before a Construction/Grading Permit will be issued.

I have read and understand that the City of Imperial Beach has adopted minimum requirements for Storm Water management of construction activities. I certify that the BMPs I have selected in Tables A and B will be implemented to effectively minimize the potentially negative impacts of this project's construction activities on Storm Water quality. I further agree to install, monitor, maintain or revise the selected BMPs to ensure their effectiveness.

I also understand that non-compliance with the City's Storm Water and Construction/Grading Ordinances may result in enforcement by the City, including fines, citations, stop-work orders, cease and desist orders or other actions.

Property owner _____ *Date* _____

TABLE A
PERMIT REQUIRED CONSTRUCTION BMPs

Minimum Required Best Management Practices (BMPs)	CALTRANS Storm Water Handbook Detail	✔ **BMP Selected**	Each selected BMPs must be shown on Grading Plan. If No BMP is selected, explain why
Step 1. Select Erosion Control method for graded Slopes (choose at least one)			
Vegetation Stabilization Planting *(see* note 1)	**SS-2, SS-4**		
Hydraulic Stabilization Hydroseeding *(see note 1)*	**SS-3, SS-4**		
Bonded Fiber Matrix *(see note 2)*	**SS-4**		
Physical Stabilization Erosion Control Blanket*(see note 2)*	**SS-7**		
Step 2. Select Erosion Control method for graded Flat Areas (slope < 5%) (choose at least one)			
Will use above Slope Control measures on flat areas also	**SS-2,3,4,7**		
Mulch, straw, wood chips, soil application	**SS-6, SS-8**		
De-silting Basin (must treat all site runoff)	**SC-2**		
Energy Dissipater Outlet Protection	**SS-10**		
Step 3. Select Sediment Control method for all disturbed areas (choose at least one)			
Silt Fence	**SC-1**		
Straw Wattles	**SC-5**		
Gravel Bags	**SC-6 & 8**		
Storm Drain Inlet Protection	**SC-10**		
De-silting Basin (sized for 10-year flow)	**SC-2**		
Step 4. Select method for preventing offsite tracking of sediment (choose at least one)			
Stabilized Construction Entrance	**TC-1**		
Construction Road Stabilization	**TC-2**		
Entrance/Exit Tire Wash	**TC-3**		
Entrance/Exit Inspection & Cleaning Facility	-		
Step 5. Select the General Site Management BMPs for each waste that will be on site			
Materials Management Material Delivery & Storage	**WM-1**		
Waste Management Concrete Waste Management	**WM-8**		
Solid Waste Management	**WM-5**		
Sanitary Waste Management	**WM-9**		
Hazardous Waste Management	**WM-6**		

Notes

1. ***When Planting or Hydroseeding are selected for erosion control, the vegetative cover must be planted by August 15 and established by October 1. If in the opinion of the City Official the vegetative cover is not established by October 1, additional hydraulic or physical erosion control BMPs will be required.***
2. ***These BMPs are temporary measures only when used without planting or hydroseeding. All slopes must have established vegetative cover prior to final grading approval.***
3. ***Not all grading projects will have every waste identified. The applicant is responsible for identifying wastes that will be on-site and applying the appropriate BMP. For example, if concrete will be used, BMP WM-8 should be selected.***

TABLE B
ADDITIONAL BMPs

Additional BMPs (available for use in conjunction with minimum BMPs)	CALTRANS Storm Water Handbook Detail	✔ **BMP Selected**
Erosion Control		
Site Development Considerations Scheduling	**SS-1**	
Preservation of Existing Vegetation	**SS-2**	
Other (submit description for approval)		
Vegetation Stabilization Vegetation Buffer Strips	**SS-2**	
Physical Stabilization Dust Control	**WE-1**	
Soil Stabilizers	**SS-5**	
Diversion of Runoff		
Earthen Dikes	**SS-9**	
Ditches and Berms	**SS-9**	
Slope Drains	**SS-11**	
Temporary Drains & Swales	**SS-9**	
Velocity Reduction		
Check Dams	**SS-4**	
Slope Terracing	-	
Sediment Control		
Brush or Rock Filter	-	
Sediment Trap	**SC-3**	
Sediment Basin	**SC-2**	
General Site Management		
Employee & Subcontractor Training	-	
Materials Management Spill Prevention & Control	**WM-4**	
Waste Management Contaminated Soil Management	**WM-7**	
Vehicle and Equipment Management Vehicle & Equipment Cleaning	**NS-8**	
Vehicle & Equipment Fueling	**NS-9**	
Vehicle & Equipment Maintenance	**NS-10**	
Construction Practices Water Conservation	**NS-1**	
Structure Construction & Painting	-	
Paving Operations	**NS-3**	
Dewatering Operations	**NS-2**	
BMP Inspection and Maintenance	**National Menu of BMPs**	
Phase Construction	**National Menu of BMPs**	
Good Housekeeping	**National Menu of BMPs**	

Notes ***Alternatives Storm Water protection measures may also be presented for City consideration in any category.***

APPENDIX 2

Project Maps

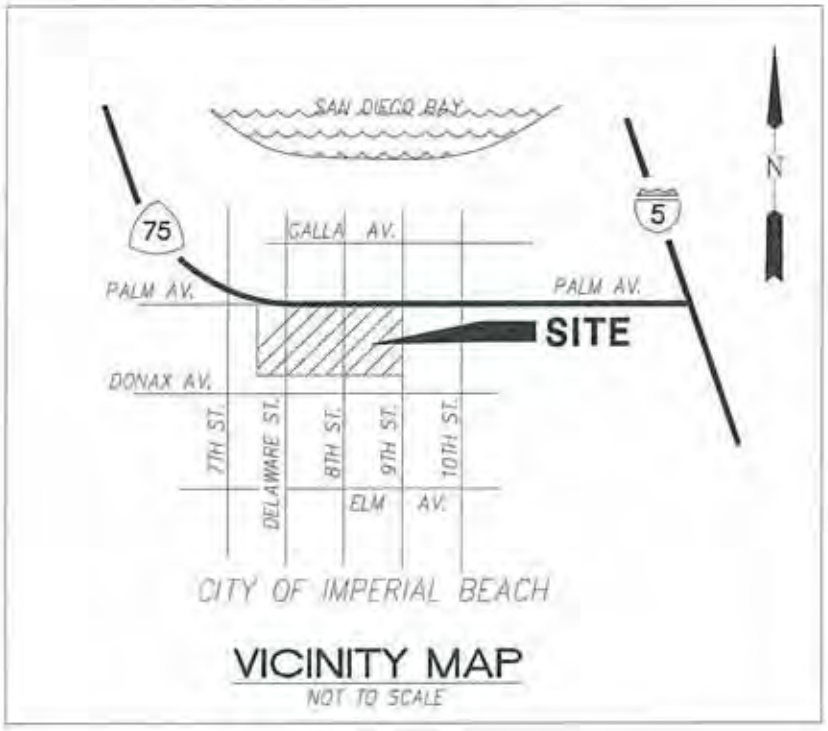

PROJECT VICINITY MAP

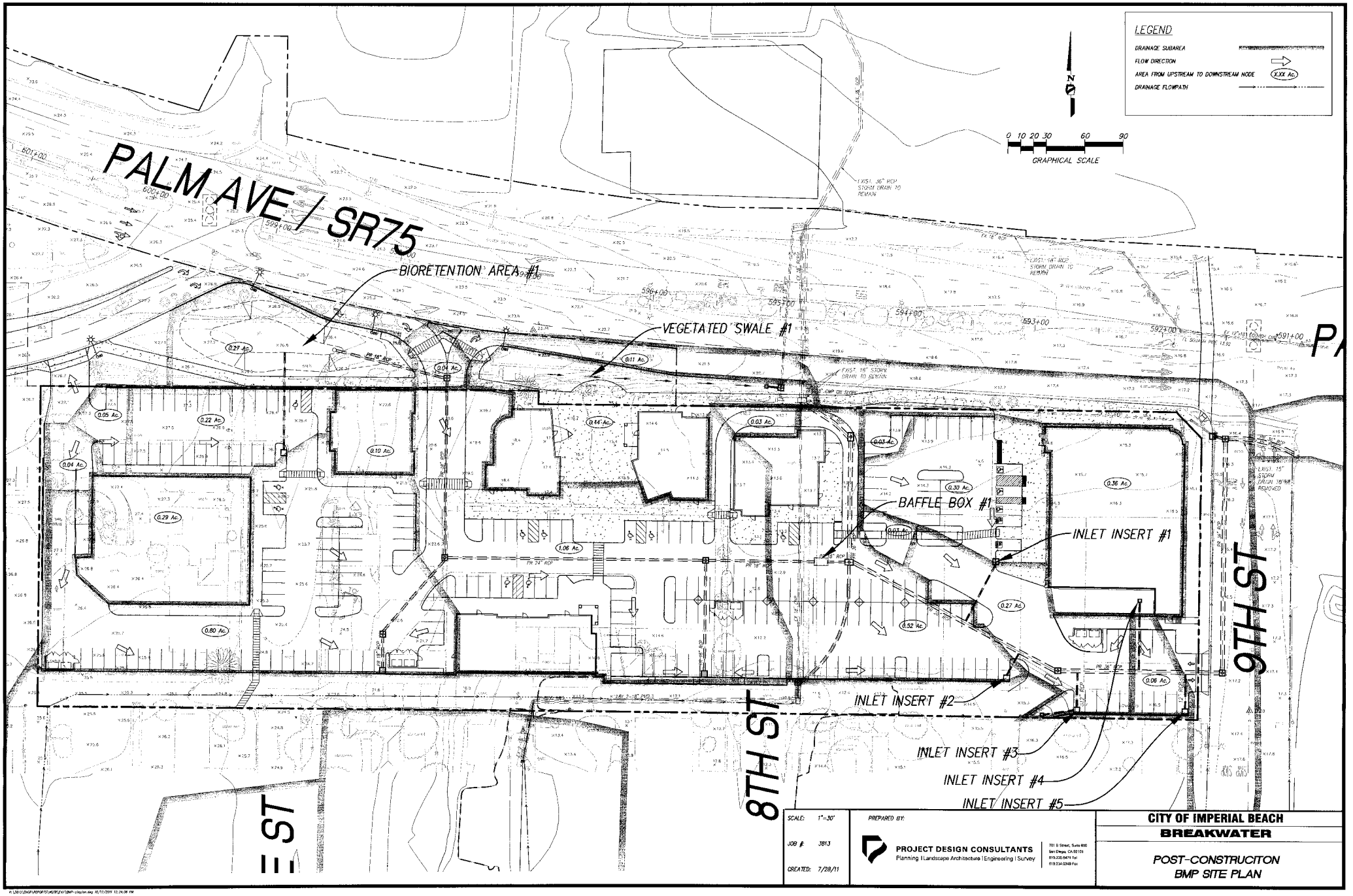

SCALE:	1"=30'
JOB #:	3813
CREATED:	7/28/11

PREPARED BY:

PROJECT DESIGN CONSULTANTS
Planning | Landscape Architecture | Engineering | Survey

701 B Street, Suite 800
San Diego, CA 92101
619.235.6471 Tel
619.234.0349 Fax

CITY OF IMPERIAL BEACH

BREAKWATER

POST-CONSTRUCITON BMP SITE PLAN

APPENDIX 3

Educational Materials

Source Control BMPs

Storm Drain Signage SD-13

Design Objectives

- Maximize Infiltration
- Provide Retention
- Slow Runoff
- Minimize Impervious Land Coverage
- ☑ Prohibit Dumping of Improper Materials
- Contain Pollutants
- Collect and Convey

Description

Waste materials dumped into storm drain inlets can have severe impacts on receiving and ground waters. Posting notices regarding discharge prohibitions at storm drain inlets can prevent waste dumping. Storm drain signs and stencils are highly visible source controls that are typically placed directly adjacent to storm drain inlets.

Approach

The stencil or affixed sign contains a brief statement that prohibits dumping of improper materials into the urban runoff conveyance system. Storm drain messages have become a popular method of alerting the public about the effects of and the prohibitions against waste disposal.

Suitable Applications

Stencils and signs alert the public to the destination of pollutants discharged to the storm drain. Signs are appropriate in residential, commercial, and industrial areas, as well as any other area where contributions or dumping to storm drains is likely.

Design Considerations

Storm drain message markers or placards are recommended at all storm drain inlets within the boundary of a development project. The marker should be placed in clear sight facing toward anyone approaching the inlet from either side. All storm drain inlet locations should be identified on the development site map.

Designing New Installations

The following methods should be considered for inclusion in the project design and show on project plans:

- Provide stenciling or labeling of all storm drain inlets and catch basins, constructed or modified, within the project area with prohibitive language. Examples include "NO DUMPING

– DRAINS TO OCEAN" and/or other graphical icons to discourage illegal dumping.

- Post signs with prohibitive language and/or graphical icons, which prohibit illegal dumping at public access points along channels and creeks within the project area.

Note - Some local agencies have approved specific signage and/or storm drain message placards for use. Consult local agency stormwater staff to determine specific requirements for placard types and methods of application.

Redeveloping Existing Installations

Various jurisdictional stormwater management and mitigation plans (SUSMP, WQMP, etc.) define "redevelopment" in terms of amounts of additional impervious area, increases in gross floor area and/or exterior construction, and land disturbing activities with structural or impervious surfaces. If the project meets the definition of "redevelopment", then the requirements stated under " designing new installations" above should be included in all project design plans.

Additional Information

Maintenance Considerations

- Legibility of markers and signs should be maintained. If required by the agency with jurisdiction over the project, the owner/operator or homeowner's association should enter into a maintenance agreement with the agency or record a deed restriction upon the property title to maintain the legibility of placards or signs.

Placement

- Signage on top of curbs tends to weather and fade.
- Signage on face of curbs tends to be worn by contact with vehicle tires and sweeper brooms.

Supplemental Information

Examples

- Most MS4 programs have storm drain signage programs. Some MS4 programs will provide stencils, or arrange for volunteers to stencil storm drains as part of their outreach program.

Other Resources

A Manual for the Standard Urban Stormwater Mitigation Plan (SUSMP), Los Angeles County Department of Public Works, May 2002.

Model Standard Urban Storm Water Mitigation Plan (SUSMP) for San Diego County, Port of San Diego, and Cities in San Diego County, February 14, 2002.

Model Water Quality Management Plan (WQMP) for County of Orange, Orange County Flood Control District, and the Incorporated Cities of Orange County, Draft February 2003.

Ventura Countywide Technical Guidance Manual for Stormwater Quality Control Measures, July 2002.

FREE

Pest Notes

for Home and Landscape from the University of California

Birds, Mammals, and Reptiles

Bats
Cliff Swallows
Coyote
Deer
Ground Squirrel
House Mouse
Lizards
Moles
Opossum
Pocket Gophers
Rabbits
Raccoons
Rats
Rattlesnakes
Skunks
Tree Squirrels
Voles (Meadow Mice)
Woodpeckers

Insects, Mites, Mollusks, and Nematodes

Ants
Aphids
Avocado Lace Bug
Bark Beetles
Bed Bugs
Bee and Wasp Stings
Black Widow and Other Widow Spiders
Boxelder Bug
Brown Recluse and Other Recluse Spiders
California Oakworm
Carpenter Ants
Carpenter Bees
Carpenterworm
Carpet Beetles
Citrus Leafminer
Clearwing Moths
Clothes Moths
Cockroaches
Codling Moth
Conenose Bugs
Cottony Cushion Scale
Drywood Termites
Earwigs
Elm Leaf Beetle
Eucalyptus Longhorned Borers
Eucalyptus Redgum Lerp Psyllid
Eucalyptus Tortoise Beetles
Fleas
Flies
Fruittree Leafroller on Ornamental and Fruit Trees
Fungus Gnats, Shore Flies, Moth Flies, and March Flies
Giant Whitefly
Glassy-winged Sharpshooter
Grasshoppers
Hackberry Woolly Aphid
Head Lice
Hobo Spider
Hoplia Beetle
Horsehair Worms
Lace Bugs
Lawn Insects
Millipedes and Centipedes
Mosquitoes

Nematodes
Oak Pit Scales
Olive Fruit Fly
Pantry Pests
Psyllids
Red Imported Fire Ant
Redhumped Caterpillar
Roses: Insect and Mite Pests and Beneficials
Scales
Scorpions
Sequoia Pitch Moth
Silverfish and Firebrats
Sixspotted Spider Mite on Plumeria
Snails and Slugs
Spider Mites
Spiders
Springtails
Squash Bugs
Sycamore Scale
Termites
Thrips
Ticks (Lyme Disease in California)
Walnut Husk Fly
Whiteflies
Windscorpion
Wood-boring Beetles in Homes
Wood Wasps and Horntails
Yellowjackets and Other Social Wasps
Zoropsis Spinimana, A Mediterranean Spider in California

April 2010

www.ipm.ucdavis.edu

Visit our Web site to download any of these helpful guides or to check out all of our pest-related publications.

FREE Pest Notes

for Home and Landscape from the University of California

Plant Diseases

Anthracnose
Apple and Pear Scab
Damping-off Diseases in the Garden
Fire Blight
Lawn Diseases: Prevention and Management
Mushrooms and Other Nuisance Fungi in Lawns
Oleander Leaf Scorch
Palm Diseases in the Landscape
Peach Leaf Curl
Phytophthora Root and Crown Rot in the Garden
Pitch Canker
Powdery Mildew on Fruits and Berries
Powdery Mildew on Ornamentals
Powdery Mildew on Vegetables
Roses: Diseases and Abiotic Disorders
Sooty Mold
Sudden Oak Death in California
Wood Decay Fungi in Landscape Trees

Weeds

Annual Bluegrass
Bermudagrass
Brooms
Burning & Stinging Nettle
Chickweeds
Clovers
Common Groundsel
Common Knotweed
Common Purslane
Crabgrass
Creeping Woodsorrel and Bermuda Buttercup
Dallisgrass
Dandelions
Dodder
Field Bindweed
Green Kyllinga
Invasive Plants
Kikuyugrass
Mallows
Mistletoe
Nutsedge
Perennial Pepperweed
Plantains
Poison Oak
Puncturevine
Roses: Cultural Practices and Weed Control
Russian Thistle
Spotted Spurge
Weed Management in Landscapes
Weed Management in Lawns
Wild Blackberries
Woody Weed Invaders
Yellow Starthistle

Management Methods Including Pesticides and Biological Control

Biological Control & Natural Enemies
Bordeaux Mixture
Hiring a Pest Control Company
Pesticides: Safe and Effective Use in the Home and Landscape
Soil Solarization for Gardens and Landscapes

Miscellaneous

Delusory Parasitosis

For other University of California gardening publications, go to www.anrcatalog.ucdavis.edu

UC IPM
Statewide Integrated Pest Management Program

ANR
University of California Agriculture and Natural Resources

UCCE University of California Cooperative Extension

Can't download?

Visit or call your local University of California Cooperative Extension office.

To find your local office, go to http://ucanr.org/ce.cfm, or look in the county government pages of your phone book.

April 2010

www.ipm.ucdavis.edu

Visit our Web site to download any of these helpful guides or to check out all of our pest-related publications.

Trash Storage Areas SD-32

Description

Trash storage areas are areas where a trash receptacle (s) are located for use as a repository for solid wastes. Stormwater runoff from areas where trash is stored or disposed of can be polluted. In addition, loose trash and debris can be easily transported by water or wind into nearby storm drain inlets, channels, and/or creeks. Waste handling operations that may be sources of stormwater pollution include dumpsters, litter control, and waste piles.

Approach

This fact sheet contains details on the specific measures required to prevent or reduce pollutants in stormwater runoff associated with trash storage and handling. Preventative measures including enclosures, containment structures, and impervious pavements to mitigate spills, should be used to reduce the likelihood of contamination.

Design Objectives

- Maximize Infiltration
- Provide Retention
- Slow Runoff
- Minimize Impervious Land Coverage
- Prohibit Dumping of Improper Materials
- ☑ Contain Pollutants
- Collect and Convey

Suitable Applications

Appropriate applications include residential, commercial and industrial areas planned for development or redevelopment. (Detached residential single-family homes are typically excluded from this requirement.)

Design Considerations

Design requirements for waste handling areas are governed by Building and Fire Codes, and by current local agency ordinances and zoning requirements. The design criteria described in this fact sheet are meant to enhance and be consistent with these code and ordinance requirements. Hazardous waste should be handled in accordance with legal requirements established in Title 22, California Code of Regulation.

Wastes from commercial and industrial sites are typically hauled by either public or commercial carriers that may have design or access requirements for waste storage areas. The design criteria in this fact sheet are recommendations and are not intended to be in conflict with requirements established by the waste hauler. The waste hauler should be contacted prior to the design of your site trash collection areas. Conflicts or issues should be discussed with the local agency.

Designing New Installations

Trash storage areas should be designed to consider the following structural or treatment control BMPs:

- Design trash container areas so that drainage from adjoining roofs and pavement is diverted around the area(s) to avoid run-on. This might include berming or grading the waste handling area to prevent run-on of stormwater.
- Make sure trash container areas are screened or walled to prevent off-site transport of trash.

- Use lined bins or dumpsters to reduce leaking of liquid waste.
- Provide roofs, awnings, or attached lids on all trash containers to minimize direct precipitation and prevent rainfall from entering containers.
- Pave trash storage areas with an impervious surface to mitigate spills.
- Do not locate storm drains in immediate vicinity of the trash storage area.
- Post signs on all dumpsters informing users that hazardous materials are not to be disposed of therein.

Redeveloping Existing Installations

Various jurisdictional stormwater management and mitigation plans (SUSMP, WQMP, etc.) define "redevelopment" in terms of amounts of additional impervious area, increases in gross floor area and/or exterior construction, and land disturbing activities with structural or impervious surfaces. The definition of " redevelopment" must be consulted to determine whether or not the requirements for new development apply to areas intended for redevelopment. If the definition applies, the steps outlined under "designing new installations" above should be followed.

Additional Information

Maintenance Considerations

The integrity of structural elements that are subject to damage (i.e., screens, covers, and signs) must be maintained by the owner/operator. Maintenance agreements between the local agency and the owner/operator may be required. Some agencies will require maintenance deed restrictions to be recorded of the property title. If required by the local agency, maintenance agreements or deed restrictions must be executed by the owner/operator before improvement plans are approved.

Other Resources

A Manual for the Standard Urban Stormwater Mitigation Plan (SUSMP), Los Angeles County Department of Public Works, May 2002.

Model Standard Urban Storm Water Mitigation Plan (SUSMP) for San Diego County, Port of San Diego, and Cities in San Diego County, February 14, 2002.

Model Water Quality Management Plan (WQMP) for County of Orange, Orange County Flood Control District, and the Incorporated Cities of Orange County, Draft February 2003.

Ventura Countywide Technical Guidance Manual for Stormwater Quality Control Measures, July 2002.

LID BMPs

Vegetated Swale TC-30

Design Considerations

- Tributary Area
- Area Required
- Slope
- Water Availability

Description

Vegetated swales are open, shallow channels with vegetation covering the side slopes and bottom that collect and slowly convey runoff flow to downstream discharge points. They are designed to treat runoff through filtering by the vegetation in the channel, filtering through a subsoil matrix, and/or infiltration into the underlying soils. Swales can be natural or manmade. They trap particulate pollutants (suspended solids and trace metals), promote infiltration, and reduce the flow velocity of stormwater runoff. Vegetated swales can serve as part of a stormwater drainage system and can replace curbs, gutters and storm sewer systems.

Targeted Constituents

☑	Sediment	▲
☑	Nutrients	●
☑	Trash	●
☑	Metals	▲
☑	Bacteria	●
☑	Oil and Grease	▲
☑	Organics	▲

Legend *(Removal Effectiveness)*

● Low ■ High

▲ Medium

California Experience

Caltrans constructed and monitored six vegetated swales in southern California. These swales were generally effective in reducing the volume and mass of pollutants in runoff. Even in the areas where the annual rainfall was only about 10 inches/yr, the vegetation did not require additional irrigation. One factor that strongly affected performance was the presence of large numbers of gophers at most of the sites. The gophers created earthen mounds, destroyed vegetation, and generally reduced the effectiveness of the controls for TSS reduction.

Advantages

- If properly designed, vegetated, and operated, swales can serve as an aesthetic, potentially inexpensive urban development or roadway drainage conveyance measure with significant collateral water quality benefits.

- Roadside ditches should be regarded as significant potential swale/buffer strip sites and should be utilized for this purpose whenever possible.

Limitations

- Can be difficult to avoid channelization.
- May not be appropriate for industrial sites or locations where spills may occur
- Grassed swales cannot treat a very large drainage area. Large areas may be divided and treated using multiple swales.
- A thick vegetative cover is needed for these practices to function properly.
- They are impractical in areas with steep topography.
- They are not effective and may even erode when flow velocities are high, if the grass cover is not properly maintained.
- In some places, their use is restricted by law: many local municipalities require curb and gutter systems in residential areas.
- Swales are mores susceptible to failure if not properly maintained than other treatment BMPs.

Design and Sizing Guidelines

- Flow rate based design determined by local requirements or sized so that 85% of the annual runoff volume is discharged at less than the design rainfall intensity.
- Swale should be designed so that the water level does not exceed 2/3rds the height of the grass or 4 inches, which ever is less, at the design treatment rate.
- Longitudinal slopes should not exceed 2.5%
- Trapezoidal channels are normally recommended but other configurations, such as parabolic, can also provide substantial water quality improvement and may be easier to mow than designs with sharp breaks in slope.
- Swales constructed in cut are preferred, or in fill areas that are far enough from an adjacent slope to minimize the potential for gopher damage. Do not use side slopes constructed of fill, which are prone to structural damage by gophers and other burrowing animals.
- A diverse selection of low growing, plants that thrive under the specific site, climatic, and watering conditions should be specified. Vegetation whose growing season corresponds to the wet season are preferred. Drought tolerant vegetation should be considered especially for swales that are not part of a regularly irrigated landscaped area.
- The width of the swale should be determined using Manning's Equation using a value of 0.25 for Manning's n.

Construction/Inspection Considerations

- Include directions in the specifications for use of appropriate fertilizer and soil amendments based on soil properties determined through testing and compared to the needs of the vegetation requirements.
- Install swales at the time of the year when there is a reasonable chance of successful establishment without irrigation; however, it is recognized that rainfall in a given year may not be sufficient and temporary irrigation may be used.
- If sod tiles must be used, they should be placed so that there are no gaps between the tiles; stagger the ends of the tiles to prevent the formation of channels along the swale or strip.
- Use a roller on the sod to ensure that no air pockets form between the sod and the soil.
- Where seeds are used, erosion controls will be necessary to protect seeds for at least 75 days after the first rainfall of the season.

Performance

The literature suggests that vegetated swales represent a practical and potentially effective technique for controlling urban runoff quality. While limited quantitative performance data exists for vegetated swales, it is known that check dams, slight slopes, permeable soils, dense grass cover, increased contact time, and small storm events all contribute to successful pollutant removal by the swale system. Factors decreasing the effectiveness of swales include compacted soils, short runoff contact time, large storm events, frozen ground, short grass heights, steep slopes, and high runoff velocities and discharge rates.

Conventional vegetated swale designs have achieved mixed results in removing particulate pollutants. A study performed by the Nationwide Urban Runoff Program (NURP) monitored three grass swales in the Washington, D.C., area and found no significant improvement in urban runoff quality for the pollutants analyzed. However, the weak performance of these swales was attributed to the high flow velocities in the swales, soil compaction, steep slopes, and short grass height.

Another project in Durham, NC, monitored the performance of a carefully designed artificial swale that received runoff from a commercial parking lot. The project tracked 11 storms and concluded that particulate concentrations of heavy metals (Cu, Pb, Zn, and Cd) were reduced by approximately 50 percent. However, the swale proved largely ineffective for removing soluble nutrients.

The effectiveness of vegetated swales can be enhanced by adding check dams at approximately 17 meter (50 foot) increments along their length (See Figure 1). These dams maximize the retention time within the swale, decrease flow velocities, and promote particulate settling. Finally, the incorporation of vegetated filter strips parallel to the top of the channel banks can help to treat sheet flows entering the swale.

Only 9 studies have been conducted on all grassed channels designed for water quality (Table 1). The data suggest relatively high removal rates for some pollutants, but negative removals for some bacteria, and fair performance for phosphorus.

Maintenance Cost

Caltrans (2002) estimated the expected annual maintenance cost for a swale with a tributary area of approximately 2 ha at approximately $2,700. Since almost all maintenance consists of mowing, the cost is fundamentally a function of the mowing frequency. Unit costs developed by SEWRPC are shown in Table 3. In many cases vegetated channels would be used to convey runoff and would require periodic mowing as well, so there may be little additional cost for the water quality component. Since essentially all the activities are related to vegetation management, no special training is required for maintenance personnel.

References and Sources of Additional Information

Barrett, Michael E., Walsh, Patrick M., Malina, Joseph F., Jr., Charbeneau, Randall J, 1998, "Performance of vegetative controls for treating highway runoff," *ASCE Journal of Environmental Engineering*, Vol. 124, No. 11, pp. 1121-1128.

Brown, W., and T. Schueler. 1997. *The Economics of Stormwater BMPs in the Mid-Atlantic Region*. Prepared for the Chesapeake Research Consortium, Edgewater, MD, by the Center for Watershed Protection, Ellicott City, MD.

Center for Watershed Protection (CWP). 1996. *Design of Stormwater Filtering Systems*. Prepared for the Chesapeake Research Consortium, Solomons, MD, and USEPA Region V, Chicago, IL, by the Center for Watershed Protection, Ellicott City, MD.

Colwell, Shanti R., Horner, Richard R., and Booth, Derek B., 2000. *Characterization of Performance Predictors and Evaluation of Mowing Practices in Biofiltration Swales*. Report to King County Land And Water Resources Division and others by Center for Urban Water Resources Management, Department of Civil and Environmental Engineering, University of Washington, Seattle, WA

Dorman, M.E., J. Hartigan, R.F. Steg, and T. Quasebarth. 1989. *Retention, Detention and Overland Flow for Pollutant Removal From Highway Stormwater Runoff. Vol. 1*. FHWA/RD 89/202. Federal Highway Administration, Washington, DC.

Goldberg. 1993. *Dayton Avenue Swale Biofiltration Study*. Seattle Engineering Department, Seattle, WA.

Harper, H. 1988. *Effects of Stormwater Management Systems on Groundwater Quality*. Prepared for Florida Department of Environmental Regulation, Tallahassee, FL, by Environmental Research and Design, Inc., Orlando, FL.

Kercher, W.C., J.C. Landon, and R. Massarelli. 1983. Grassy swales prove cost-effective for water pollution control. *Public Works*, 16: 53–55.

Koon, J. 1995. *Evaluation of Water Quality Ponds and Swales in the Issaquah/East Lake Sammamish Basins*. King County Surface Water Management, Seattle, WA, and Washington Department of Ecology, Olympia, WA.

Metzger, M. E., D. F. Messer, C. L. Beitia, C. M. Myers, and V. L. Kramer. 2002. The Dark Side Of Stormwater Runoff Management: Disease Vectors Associated With Structural BMPs. Stormwater 3(2): 24-39.Oakland, P.H. 1983. An evaluation of stormwater pollutant removal

through grassed swale treatment. In *Proceedings of the International Symposium of Urban Hydrology, Hydraulics and Sediment Control, Lexington, KY.* pp. 173–182.

Occoquan Watershed Monitoring Laboratory. 1983. Final Report: *Metropolitan Washington Urban Runoff Project.* Prepared for the Metropolitan Washington Council of Governments, Washington, DC, by the Occoquan Watershed Monitoring Laboratory, Manassas, VA.

Pitt, R., and J. McLean. 1986. *Toronto Area Watershed Management Strategy Study: Humber River Pilot Watershed Project.* Ontario Ministry of Environment, Toronto, ON.

Schueler, T. 1997. Comparative Pollutant Removal Capability of Urban BMPs: A reanalysis. *Watershed Protection Techniques* 2(2):379–383.

Seattle Metro and Washington Department of Ecology. 1992. *Biofiltration Swale Performance: Recommendations and Design Considerations.* Publication No. 657. Water Pollution Control Department, Seattle, WA.

Southeastern Wisconsin Regional Planning Commission (SWRPC). 1991. *Costs of Urban Nonpoint Source Water Pollution Control Measures.* Technical report no. 31. Southeastern Wisconsin Regional Planning Commission, Waukesha, WI.

U.S. EPA, 1999, Stormwater Fact Sheet: Vegetated Swales, Report # 832-F-99-006 http://www.epa.gov/owm/mtb/vegswale.pdf, Office of Water, Washington DC.

Wang, T., D. Spyridakis, B. Mar, and R. Horner. 1981. *Transport, Deposition and Control of Heavy Metals in Highway Runoff.* FHWA-WA-RD-39-10. University of Washington, Department of Civil Engineering, Seattle, WA.

Washington State Department of Transportation, 1995, *Highway Runoff Manual,* Washington State Department of Transportation, Olympia, Washington.

Welborn, C., and J. Veenhuis. 1987. *Effects of Runoff Controls on the Quantity and Quality of Urban Runoff in Two Locations in Austin, TX.* USGS Water Resources Investigations Report No. 87-4004. U.S. Geological Survey, Reston, VA.

Yousef, Y., M. Wanielista, H. Harper, D. Pearce, and R. Tolbert. 1985. *Best Management Practices: Removal of Highway Contaminants By Roadside Swales.* University of Central Florida and Florida Department of Transportation, Orlando, FL.

Yu, S., S. Barnes, and V. Gerde. 1993. *Testing of Best Management Practices for Controlling Highway Runoff.* FHWA/VA-93-R16. Virginia Transportation Research Council, Charlottesville, VA.

Information Resources

Maryland Department of the Environment (MDE). 2000. *Maryland Stormwater Design Manual.* www.mde.state.md.us/environment/wma/stormwatermanual. Accessed May 22, 2001.

Reeves, E. 1994. Performance and Condition of Biofilters in the Pacific Northwest. *Watershed Protection Techniques* 1(3):117–119.

Seattle Metro and Washington Department of Ecology. 1992. *Biofiltration Swale Performance.* Recommendations and Design Considerations. Publication No. 657. Seattle Metro and Washington Department of Ecology, Olympia, WA.

USEPA 1993. *Guidance Specifying Management Measures for Sources of Nonpoint Pollution in Coastal Waters.* EPA-840-B-92-002. U.S. Environmental Protection Agency, Office of Water. Washington, DC.

Watershed Management Institute (WMI). 1997. *Operation, Maintenance, and Management of Stormwater Management Systems.* Prepared for U.S. Environmental Protection Agency, Office of Water. Washington, DC, by the Watershed Management Institute, Ingleside, MD.

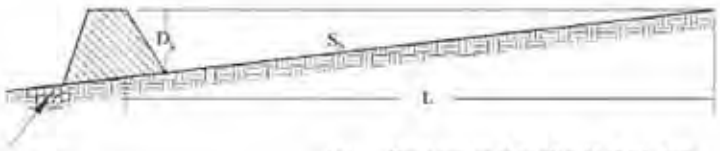

Provide for scour protection.

(a) Cross section of swale with check dam.

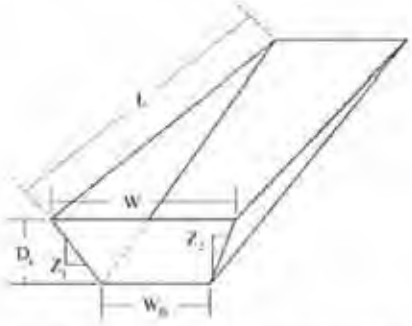

(b) Dimensional view of swale impoundment area.

Notation:
L = Length of swale impoundment area per check dam (ft)
D_S = Depth of check dam (ft)
S_S = Bottom slope of swale (ft/ft)
W = Top width of check dam (ft)
W_B = Bottom width of check dam (ft)
$Z_{1&2}$ = Ratio of horizontal to vertical change in swale side slope (ft/ft)

Bioretention TC-32

Design Considerations

- Soil for Infiltration
- Tributary Area
- Slope
- Aesthetics
- Environmental Side-effects

Description

The bioretention best management practice (BMP) functions as a soil and plant-based filtration device that removes pollutants through a variety of physical, biological, and chemical treatment processes. These facilities normally consist of a grass buffer strip, sand bed, ponding area, organic layer or mulch layer, planting soil, and plants. The runoff's velocity is reduced by passing over or through buffer strip and subsequently distributed evenly along a ponding area. Exfiltration of the stored water in the bioretention area planting soil into the underlying soils occurs over a period of days.

Targeted Constituents

☑	Sediment	■
☑	Nutrients	▲
☑	Trash	■
☑	Metals	■
☑	Bacteria	■
☑	Oil and Grease	■
☑	Organics	■

Legend *(Removal Effectiveness)*

- ● Low
- ■ High
- ▲ Medium

California Experience

None documented. Bioretention has been used as a stormwater BMP since 1992. In addition to Prince George's County, MD and Alexandria, VA, bioretention has been used successfully at urban and suburban areas in Montgomery County, MD; Baltimore County, MD; Chesterfield County, VA; Prince William County, VA; Smith Mountain Lake State Park, VA; and Cary, NC.

Advantages

- Bioretention provides stormwater treatment that enhances the quality of downstream water bodies by temporarily storing runoff in the BMP and releasing it over a period of four days to the receiving water (EPA, 1999).
- The vegetation provides shade and wind breaks, absorbs noise, and improves an area's landscape.

Limitations

- The bioretention BMP is not recommended for areas with slopes greater than 20% or where mature tree removal would

be required since clogging may result, particularly if the BMP receives runoff with high sediment loads (EPA, 1999).

- Bioretention is not a suitable BMP at locations where the water table is within 6 feet of the ground surface and where the surrounding soil stratum is unstable.
- By design, bioretention BMPs have the potential to create very attractive habitats for mosquitoes and other vectors because of highly organic, often heavily vegetated areas mixed with shallow water.
- In cold climates the soil may freeze, preventing runoff from infiltrating into the planting soil.

Design and Sizing Guidelines

- The bioretention area should be sized to capture the design storm runoff.
- In areas where the native soil permeability is less than 0.5 in/hr an underdrain should be provided.
- Recommended minimum dimensions are 15 feet by 40 feet, although the preferred width is 25 feet. Excavated depth should be 4 feet.
- Area should drain completely within 72 hours.
- Approximately 1 tree or shrub per 50 ft^2 of bioretention area should be included.
- Cover area with about 3 inches of mulch.

Construction/Inspection Considerations

Bioretention area should not be established until contributing watershed is stabilized.

Performance

Bioretention removes stormwater pollutants through physical and biological processes, including adsorption, filtration, plant uptake, microbial activity, decomposition, sedimentation and volatilization (EPA, 1999). Adsorption is the process whereby particulate pollutants attach to soil (e.g., clay) or vegetation surfaces. Adequate contact time between the surface and pollutant must be provided for in the design of the system for this removal process to occur. Thus, the infiltration rate of the soils must not exceed those specified in the design criteria or pollutant removal may decrease. Pollutants removed by adsorption include metals, phosphorus, and hydrocarbons. Filtration occurs as runoff passes through the bioretention area media, such as the sand bed, ground cover, and planting soil.

Common particulates removed from stormwater include particulate organic matter, phosphorus, and suspended solids. Biological processes that occur in wetlands result in pollutant uptake by plants and microorganisms in the soil. Plant growth is sustained by the uptake of nutrients from the soils, with woody plants locking up these nutrients through the seasons. Microbial activity within the soil also contributes to the removal of nitrogen and organic matter. Nitrogen is removed by nitrifying and denitrifying bacteria, while aerobic bacteria are responsible for the decomposition of the organic matter. Microbial processes require oxygen and can result in depleted oxygen levels if the bioretention area is not adequately

aerated. Sedimentation occurs in the swale or ponding area as the velocity slows and solids fall out of suspension.

The removal effectiveness of bioretention has been studied during field and laboratory studies conducted by the University of Maryland (Davis et al, 1998). During these experiments, synthetic stormwater runoff was pumped through several laboratory and field bioretention areas to simulate typical storm events in Prince George's County, MD. Removal rates for heavy metals and nutrients are shown in Table 1.

Table 1 Laboratory and Estimated Bioretention Davis et al. (1998); PGDER (1993)

Pollutant	Removal Rate
Total Phosphorus	70-83%
Metals (Cu, Zn, Pb)	93-98%
TKN	68-80%
Total Suspended Solids	90%
Organics	90%
Bacteria	90%

Results for both the laboratory and field experiments were similar for each of the pollutants analyzed. Doubling or halving the influent pollutant levels had little effect on the effluent pollutants concentrations (Davis et al, 1998).

The microbial activity and plant uptake occurring in the bioretention area will likely result in higher removal rates than those determined for infiltration BMPs.

Siting Criteria

Bioretention BMPs are generally used to treat stormwater from impervious surfaces at commercial, residential, and industrial areas (EPA, 1999). Implementation of bioretention for stormwater management is ideal for median strips, parking lot islands, and swales. Moreover, the runoff in these areas can be designed to either divert directly into the bioretention area or convey into the bioretention area by a curb and gutter collection system.

The best location for bioretention areas is upland from inlets that receive sheet flow from graded areas and at areas that will be excavated (EPA, 1999). In order to maximize treatment effectiveness, the site must be graded in such a way that minimizes erosive conditions as sheet flow is conveyed to the treatment area. Locations where a bioretention area can be readily incorporated into the site plan without further environmental damage are preferred. Furthermore, to effectively minimize sediment loading in the treatment area, bioretention only should be used in stabilized drainage areas.

Additional Design Guidelines

The layout of the bioretention area is determined after site constraints such as location of utilities, underlying soils, existing vegetation, and drainage are considered (EPA, 1999). Sites with loamy sand soils are especially appropriate for bioretention because the excavated soil can be backfilled and used as the planting soil, thus eliminating the cost of importing planting soil.

The use of bioretention may not be feasible given an unstable surrounding soil stratum, soils with clay content greater than 25 percent, a site with slopes greater than 20 percent, and/or a site with mature trees that would be removed during construction of the BMP.

Bioretention can be designed to be off-line or on-line of the existing drainage system (EPA, 1999). The drainage area for a bioretention area should be between 0.1 and 0.4 hectares (0.25 and 1.0 acres). Larger drainage areas may require multiple bioretention areas. Furthermore, the maximum drainage area for a bioretention area is determined by the expected rainfall intensity and runoff rate. Stabilized areas may erode when velocities are greater than 5 feet per second (1.5 meter per second). The designer should determine the potential for erosive conditions at the site.

The size of the bioretention area, which is a function of the drainage area and the runoff generated from the area is sized to capture the water quality volume.

The recommended minimum dimensions of the bioretention area are 15 feet (4.6 meters) wide by 40 feet (12.2 meters) long, where the minimum width allows enough space for a dense, randomly-distributed area of trees and shrubs to become established. Thus replicating a natural forest and creating a microclimate, thereby enabling the bioretention area to tolerate the effects of heat stress, acid rain, runoff pollutants, and insect and disease infestations which landscaped areas in urban settings typically are unable to tolerate. The preferred width is 25 feet (7.6 meters), with a length of twice the width. Essentially, any facilities wider than 20 feet (6.1 meters) should be twice as long as they are wide, which promotes the distribution of flow and decreases the chances of concentrated flow.

In order to provide adequate storage and prevent water from standing for excessive periods of time the ponding depth of the bioretention area should not exceed 6 inches (15 centimeters). Water should not be left to stand for more than 72 hours. A restriction on the type of plants that can be used may be necessary due to some plants' water intolerance. Furthermore, if water is left standing for longer than 72 hours mosquitoes and other insects may start to breed.

The appropriate planting soil should be backfilled into the excavated bioretention area. Planting soils should be sandy loam, loamy sand, or loam texture with a clay content ranging from 10 to 25 percent.

Generally the soil should have infiltration rates greater than 0.5 inches (1.25 centimeters) per hour, which is typical of sandy loams, loamy sands, or loams. The pH of the soil should range between 5.5 and 6.5, where pollutants such as organic nitrogen and phosphorus can be adsorbed by the soil and microbial activity can flourish. Additional requirements for the planting soil include a 1.5 to 3 percent organic content and a maximum 500 ppm concentration of soluble salts.

Soil tests should be performed for every 500 cubic yards (382 cubic meters) of planting soil, with the exception of pH and organic content tests, which are required only once per bioretention area (EPA, 1999). Planting soil should be 4 inches (10.1 centimeters) deeper than the bottom of the largest root ball and 4 feet (1.2 meters) altogether. This depth will provide adequate soil for the plants' root systems to become established, prevent plant damage due to severe wind, and provide adequate moisture capacity. Most sites will require excavation in order to obtain the recommended depth.

Planting soil depths of greater than 4 feet (1.2 meters) may require additional construction practices such as shoring measures (EPA, 1999). Planting soil should be placed in 18 inches or greater lifts and lightly compacted until the desired depth is reached. Since high canopy trees may be destroyed during maintenance the bioretention area should be vegetated to resemble a terrestrial forest community ecosystem that is dominated by understory trees. Three species each of both trees and shrubs are recommended to be planted at a rate of 2500 trees and shrubs per hectare (1000 per acre). For instance, a 15 foot (4.6 meter) by 40 foot (12.2 meter) bioretention area (600 square feet or 55.75 square meters) would require 14 trees and shrubs. The shrub-to-tree ratio should be 2:1 to 3:1.

Trees and shrubs should be planted when conditions are favorable. Vegetation should be watered at the end of each day for fourteen days following its planting. Plant species tolerant of pollutant loads and varying wet and dry conditions should be used in the bioretention area.

The designer should assess aesthetics, site layout, and maintenance requirements when selecting plant species. Adjacent non-native invasive species should be identified and the designer should take measures, such as providing a soil breach to eliminate the threat of these species invading the bioretention area. Regional landscaping manuals should be consulted to ensure that the planting of the bioretention area meets the landscaping requirements established by the local authorities. The designers should evaluate the best placement of vegetation within the bioretention area. Plants should be placed at irregular intervals to replicate a natural forest. Trees should be placed on the perimeter of the area to provide shade and shelter from the wind. Trees and shrubs can be sheltered from damaging flows if they are placed away from the path of the incoming runoff. In cold climates, species that are more tolerant to cold winds, such as evergreens, should be placed in windier areas of the site.

Following placement of the trees and shrubs, the ground cover and/or mulch should be established. Ground cover such as grasses or legumes can be planted at the beginning of the growing season. Mulch should be placed immediately after trees and shrubs are planted. Two to 3 inches (5 to 7.6 cm) of commercially-available fine shredded hardwood mulch or shredded hardwood chips should be applied to the bioretention area to protect from erosion.

Maintenance

The primary maintenance requirement for bioretention areas is that of inspection and repair or replacement of the treatment area's components. Generally, this involves nothing more than the routine periodic maintenance that is required of any landscaped area. Plants that are appropriate for the site, climatic, and watering conditions should be selected for use in the bioretention cell. Appropriately selected plants will aide in reducing fertilizer, pesticide, water, and overall maintenance requirements. Bioretention system components should blend over time through plant and root growth, organic decomposition, and the development of a natural

soil horizon. These biologic and physical processes over time will lengthen the facility's life span and reduce the need for extensive maintenance.

Routine maintenance should include a biannual health evaluation of the trees and shrubs and subsequent removal of any dead or diseased vegetation (EPA, 1999). Diseased vegetation should be treated as needed using preventative and low-toxic measures to the extent possible. BMPs have the potential to create very attractive habitats for mosquitoes and other vectors because of highly organic, often heavily vegetated areas mixed with shallow water. Routine inspections for areas of standing water within the BMP and corrective measures to restore proper infiltration rates are necessary to prevent creating mosquito and other vector habitat. In addition, bioretention BMPs are susceptible to invasion by aggressive plant species such as cattails, which increase the chances of water standing and subsequent vector production if not routinely maintained.

In order to maintain the treatment area's appearance it may be necessary to prune and weed. Furthermore, mulch replacement is suggested when erosion is evident or when the site begins to look unattractive. Specifically, the entire area may require mulch replacement every two to three years, although spot mulching may be sufficient when there are random void areas. Mulch replacement should be done prior to the start of the wet season.

New Jersey's Department of Environmental Protection states in their bioretention systems standards that accumulated sediment and debris removal (especially at the inflow point) will normally be the primary maintenance function. Other potential tasks include replacement of dead vegetation, soil pH regulation, erosion repair at inflow points, mulch replenishment, unclogging the underdrain, and repairing overflow structures. There is also the possibility that the cation exchange capacity of the soils in the cell will be significantly reduced over time. Depending on pollutant loads, soils may need to be replaced within 5-10 years of construction (LID, 2000).

Cost

Construction Cost

Construction cost estimates for a bioretention area are slightly greater than those for the required landscaping for a new development (EPA, 1999). A general rule of thumb (Coffman, 1999) is that residential bioretention areas average about $3 to $4 per square foot, depending on soil conditions and the density and types of plants used. Commercial, industrial and institutional site costs can range between $10 to $40 per square foot, based on the need for control structures, curbing, storm drains and underdrains.

Retrofitting a site typically costs more, averaging $6,500 per bioretention area. The higher costs are attributed to the demolition of existing concrete, asphalt, and existing structures and the replacement of fill material with planting soil. The costs of retrofitting a commercial site in Maryland, Kettering Development, with 15 bioretention areas were estimated at $111,600.

In any bioretention area design, the cost of plants varies substantially and can account for a significant portion of the expenditures. While these cost estimates are slightly greater than those of typical landscaping treatment (due to the increased number of plantings, additional soil excavation, backfill material, use of underdrains etc.), those landscaping expenses that would be required regardless of the bioretention installation should be subtracted when determining the net cost.

Perhaps of most importance, however, the cost savings compared to the use of traditional structural stormwater conveyance systems makes bioretention areas quite attractive financially. For example, the use of bioretention can decrease the cost required for constructing stormwater conveyance systems at a site. A medical office building in Maryland was able to reduce the amount of storm drain pipe that was needed from 800 to 230 feet - a cost savings of $24,000 (PGDER, 1993). And a new residential development spent a total of approximately $100,000 using bioretention cells on each lot instead of nearly $400,000 for the traditional stormwater ponds that were originally planned (Rappahanock,). Also, in residential areas, stormwater management controls become a part of each property owner's landscape, reducing the public burden to maintain large centralized facilities.

Maintenance Cost

The operation and maintenance costs for a bioretention facility will be comparable to those of typical landscaping required for a site. Costs beyond the normal landscaping fees will include the cost for testing the soils and may include costs for a sand bed and planting soil.

References and Sources of Additional Information

Coffman, L.S., R. Goo and R. Frederick, 1999: Low impact development: an innovative alternative approach to stormwater management. Proceedings of the 26th Annual Water Resources Planning and Management Conference ASCE, June 6-9, Tempe, Arizona.

Davis, A.P., Shokouhian, M., Sharma, H. and Minami, C., "Laboratory Study of Biological Retention (Bioretention) for Urban Stormwater Management," *Water Environ. Res.*, 73(1), 5-14 (2001).

Davis, A.P., Shokouhian, M., Sharma, H., Minami, C., and Winogradoff, D. "Water Quality Improvement through Bioretention: Lead, Copper, and Zinc," *Water Environ. Res.*, accepted for publication, August 2002.

Kim, H., Seagren, E.A., and Davis, A.P., "Engineered Bioretention for Removal of Nitrate from Stormwater Runoff," *WEFTEC 2000 Conference Proceedings on CDROM Research Symposium, Nitrogen Removal*, Session 19, Anaheim CA, October 2000.

Hsieh, C.-h. and Davis, A.P. "Engineering Bioretention for Treatment of Urban Stormwater Runoff," *Watersheds 2002, Proceedings on CDROM Research Symposium*, Session 15, Ft. Lauderdale, FL, Feb. 2002.

Prince George's County Department of Environmental Resources (PGDER), 1993. Design Manual for Use of *Bioretention in Stormwater Management*. Division of Environmental Management, Watershed Protection Branch. Landover, MD.

U.S. EPA Office of Water, 1999. Stormwater Technology Fact Sheet: Bioretention. EPA 832-F-99-012.

Weinstein, N. Davis, A.P. and Veeramachaneni, R. "Low Impact Development (LID) Stormwater Management Approach for the Control of Diffuse Pollution from Urban Roadways," *5th International Conference Diffuse/Nonpoint Pollution and Watershed Management Proceedings*, C.S. Melching and Emre Alp, Eds. 2001 International Water Association

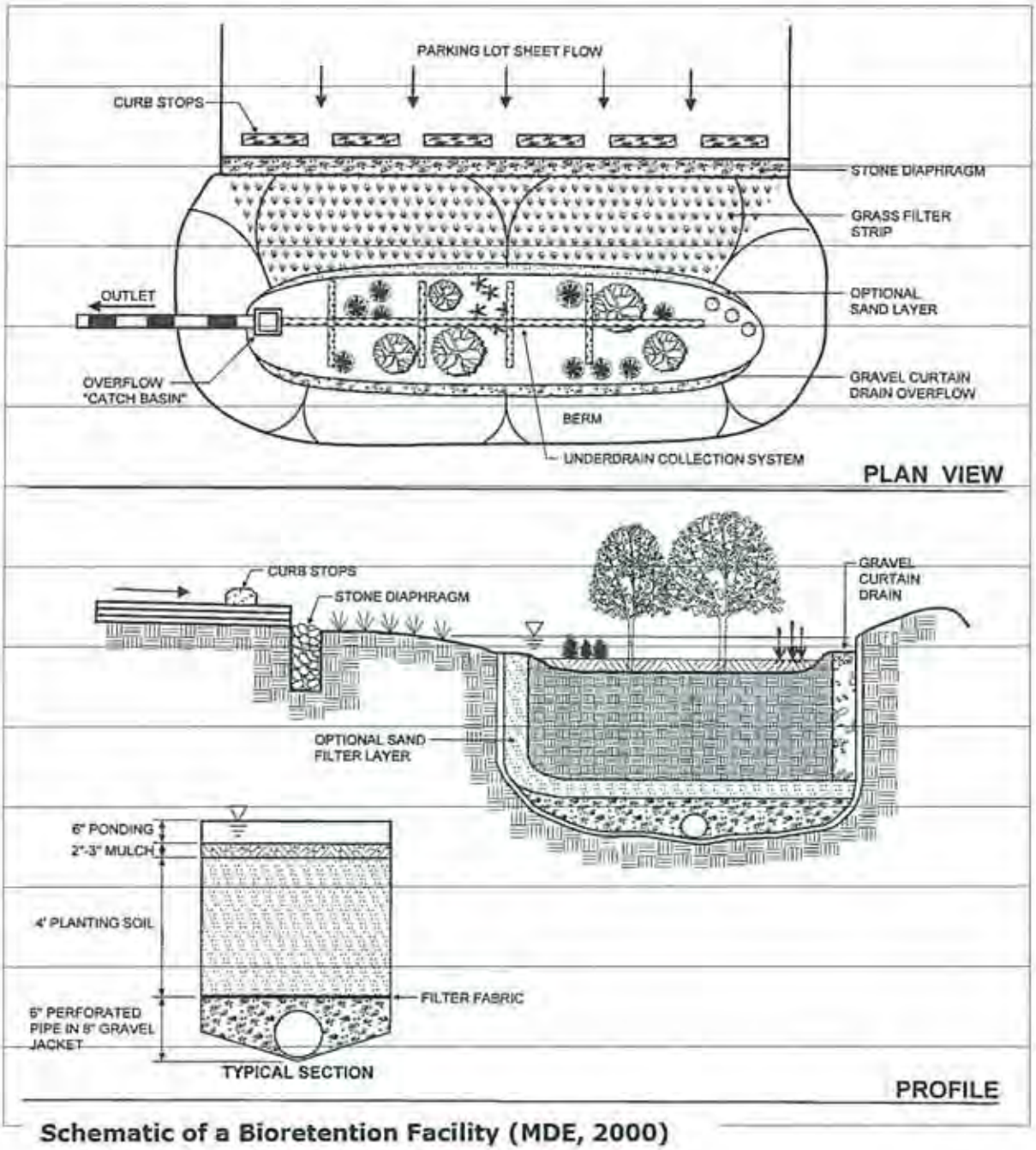

Schematic of a Bioretention Facility (MDE, 2000)

APPENDIX 4

BMP Sizing Calculations and Design Details

BMP Sizing Calculations

Table 4-2 Runoff factors for surfaces draining to IMPs (From Jan 2009 Model SUSMP)

Code	Factor	Surface
imp	1	Roofs, Concrete, or Grouted Unit Pavers
per	0.1	Pervious concrete, porous asphalt, crushed aggregate, turfblock, amended, mulched soil, landscape
sup	0.2	Solid Unit pavers on granular base, min. 3/16 inch joint space

IV. Areas Draining to Bioretention Areas

			Bioretention Area #		1			
DMA Name	DMA Area (SF)	Post-project surface type	DMA Runoff Factor	DMA Area x Runoff factor	IMP Sizing Factor	Minimum Area Reqd	Area Provided	Result
	36353	imp	1	36352.82				
Total	36353			36352.82	0.04	1454	1730	OK

Vegetated Swale Q-wq

Project Description

Friction Method	Manning Formula
Solve For	Normal Depth

Input Data

Roughness Coefficient	0.250	
Channel Slope	0.02000	ft/ft
Left Side Slope	2.00	ft/ft (H:V)
Right Side Slope	2.00	ft/ft (H:V)
Bottom Width	3.00	ft
Discharge	0.07	ft³/s

Results

Normal Depth	0.12	ft
Flow Area	0.37	ft²
Wetted Perimeter	3.52	ft
Hydraulic Radius	0.11	ft
Top Width	3.46	ft
Critical Depth	0.03	ft
Critical Slope	3.12732	ft/ft
Velocity	0.19	ft/s
Velocity Head	0.00	ft
Specific Energy	0.12	ft
Froude Number	0.10	
Flow Type	Subcritical	

$t = \frac{L}{V} \div 60$

$= \frac{128}{0.19} \div 60 = 11.2 \text{ min}$

$11.2 \text{ min} > 10 \text{ min}$

OK.

GVF Input Data

Downstream Depth	0.00	ft
Length	0.00	ft
Number Of Steps	0	

GVF Output Data

Upstream Depth	0.00	ft
Profile Description		
Profile Headloss	0.00	ft
Downstream Velocity	Infinity	ft/s
Upstream Velocity	Infinity	ft/s
Normal Depth	0.12	ft
Critical Depth	0.03	ft
Channel Slope	0.02000	ft/ft

Vegetated Swale Q-wq

GVF Output Data

Critical Slope	3.12732	ft/ft

BIO CLEAN®
ENVIRONMENTAL SERVICES, INC.

Nutrient Separating Baffle Box

A Superior Stormwater Treatment System Separated from the Rest.

The Nutrient Separating Baffle Box (NSBB) is a widely accepted and desired stormwater solution chosen by civil engineers, municipalities and developers nationwide because of its superior characteristics. The NSBB is easy to install and maintain and is the only systems with a two stage maintenance option, which minimizes maintenance costs.

Hundreds of Nutrient Separating Baffle Boxes have been installed nation wide, from Florida to California because of its superior and proven design. The NSBB efficiently removes TSS, hydrocarbons, nutrients, metals and debris/organics from stormwater runoff. The patented filtration screen system captures and stores trash and organics in a dry state, which prevents nutrient leaching and bacterial build up.

System Characteristics

Traps Oil & Grease
The skimmer and hydrocarbon booms captures all forms of hydrocarbons.

High TSS Removal
The three chambered design maximizes capture of large and fine TSS.

89.8% TSS Removal
Pavott - 1996
86.3% TSS Removal
Harvey's Lake - 2004
93.3% TSS Removal
Dillard - 2006

Low Installation Cost
Bottom of structure less than 4 feet from invert of pipe.

Separates Nutrients & Trash
The patented filtration screen system captures and stores trash and organics in a dry state which prevents nutrient

Low Head Loss
Allows for easy retrofit and inline installation. Eliminates the need for expensive diversion structures.

Easy Maintenance
Unobstructed Manhole Access

POLLUTANT	REMOVAL EFFICIENCY
Trash & Debris	99%[1]
TSS	76.9%[2] to 93.3%[3]
Fine TSS (d_{50} 63 µm)	67.3%[4]
Metals	Up to 57%[5]
Total Nitrogen	38% to 63%[5]
Total Phosphorus	18% to 70%[2,5]

1. [illegible]
2. [illegible]
3. [illegible]
4. [illegible]
5. [illegible]

Setting a New Standard for Hydrodynamic Separators.

The Nutrient Separating Baffle Box is designed to do more than most systems. This system is effective at removing not only TSS, but also fine TSS and gross solids making it, overall, a more effective treatment system compared to traditional swirl type separators. This system has been proven to provide the following benefits:

System Benefits

- **Can Treat 100% of the Flow.**
  Offline Configuration is Not Required.
- **Inexpensive Maintenance.**
  Patented screen system allows gross solids to be removed without vacuuming out the water.
- **Minimal Head Loss.**
  Hydraulically efficient design generates less head loss than diversion structures.
- **Custom Designs Available.**
  Can be modified to meet your needs.
- **Easy to Install.**
  Delivered in a top & bottom half to minimize weight. Shallow profile minimizes installation costs.
- **5 Year Warranty.**
  Made of precast concrete, fiberglass, aluminum & stainless steel. No cheap plastics!

BIO CLEAN®
ENVIRONMENTAL SERVICES, INC.
P O Box 869, Oceanside, CA 92049
(760) 433-7640 • Fax (760) 433-3176
www.biocleanenvironmental.net

"The Stormwater Standard"

Functional Description

Captures:

- **Trash & Debris** D
- **Oxygen Demanding Substances/Organic Compounds** D
- **Hydrocarbons, Oils & Grease**
- **TSS** (including fines)
- **Nutrients** (particulates)
- **Heavy Metals** (particulates)

"Pollutants with this symbol D are stored in a dry state".

The Filtration Screen System is Patented

During Storm Event

Why Dry State Storage? D

Storing Trash, Debris, Organics, and Oxygen Demanding Substances in a Dry State Prevents:

- Prevent Nutrient Leaching
- Eliminate Septic Conditions
- Minimize Bacteria Growth
- Eliminate Bad Odors

Nutrient Separating Baffle Box

Standing Water is Clear & No Bacteria Growth Visible.

Other Systems

Standing Water is Not Clear & Bacteria Growth Visible.

After Storm Event

Operation:

Skimmer & Boom
Collects hydrocarbons & controls flow velocity which improves removal efficiency.

Deflectors
Prevents re-suspension of captured pollutants at higher flows by directing water currents above sediment chambers.

Filtration Screen System
Collects and stores trash, debris, organics, and oxygen demanding substances in a dry state above the standing water. As mentioned above this has many performance benefits along with simplifying maintenance.

Multiple Sediment Chambers
Maximizes TSS removal and eliminates scouring during extreme flow rates.

BIO CLEAN ENVIRONMENTAL SERVICES, INC.

P O Box 869, Oceanside, CA 92049
(760) 433-7640 • Fax (760) 433-3176
www.biocleanenvironmental.net

"The Stormwater Standard"

BIO CLEAN ENVIRONMENTAL

MODEL NO. NSBB 4-8-84

RECOMMENDED PIPE SIZES: 12" to 18"

FLOW, TREATMENT, & BYPASS SPECIFICATIONS FOR THE BIOMASS SEPARATING BASKET

1. Inflow Pipe Area	1.7 SQ.FT.
2. Open Orifice Area in Biomass Separating Basket	19.0 SQ.FT.
3. Treatable Flow Area With No Blockage	19.0 SQ.FT.
4. Treatable Flow Area With 50% Blockage	9.5 SQ.FT.
5. Treatable Flow Area With 75% Blockage	14.3 SQ.FT.
6. Minimum Bypass Available (With Basket 100% Full)	5.2 SQ.FT.

BASKET STORAGE = 20.5 CU. FT. (.76 CU YD.)

SEDIMENT STORAGE

Lower Front Chamber	46 CU. FT.
Lower Rear Chamber	46 CU. FT.
TOTAL	92 CU. FT. (3.4 CU YD.)

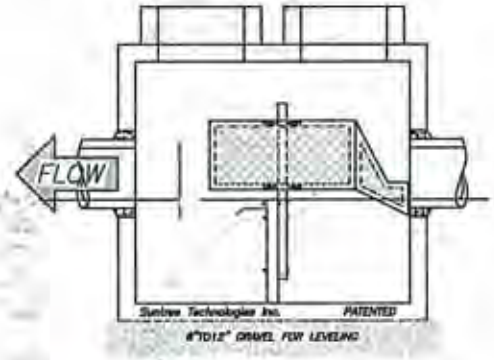

REAR VIEW

LEFT END VIEW

NOTES:

1. CONCRETE 28 DAY COMPRESSIVE STRENGTH fc=5,000 PSI.
2. REINFORCING:ASTM A-615, GRADE 60.
3. SUPPORTS AN H20 LOADING AS INDICATED BY AASHTO.
4. JOINT SEALANT: BUTYL RUBBER SS-S-00210
5. ALL WALLS, TOP + BOTTOM ARE 6" THICK.

PEAK DESIGN FLOW

10.6 C.F.S.

(BASED ON 6 FT. PER SEC. FLOW MULTIPLIED BY THE MIN. BYPASS AVAILABLE.)

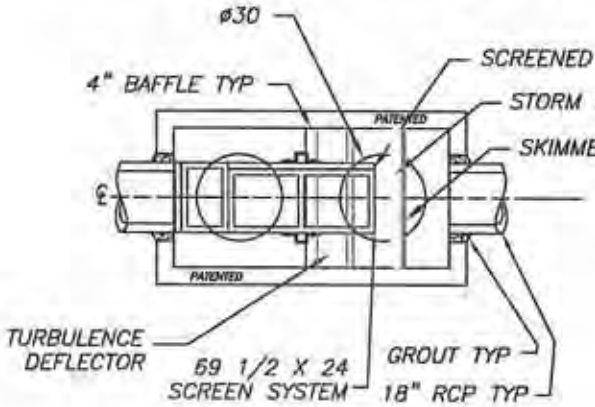

PLAN VIEW

PATENTED

THE STRUCTURE IN THIS DRAWING IS PRIMARILY INTENDED TO BE INSTALLED IN OFF ROAD LOCATIONS WITH LESS THAN 5' OF COVER. STRUCTURES ARE READILY AVAILABLE FOR ALL OTHER CONDITIONS. CONSULT SUNTREE TECHNOLOGIES' REPRESENTATIVE FOR DETAILS.

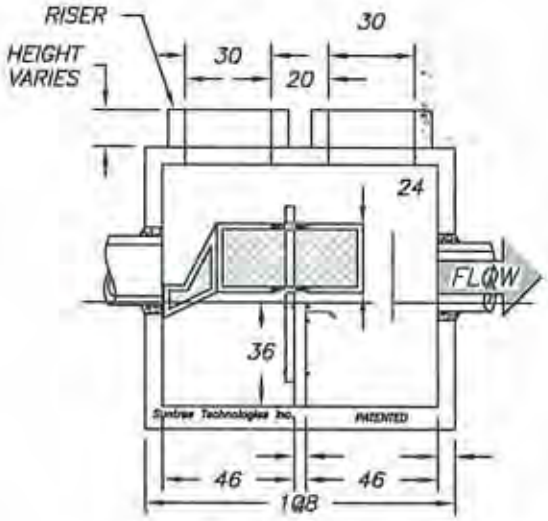

FRONT VIEW

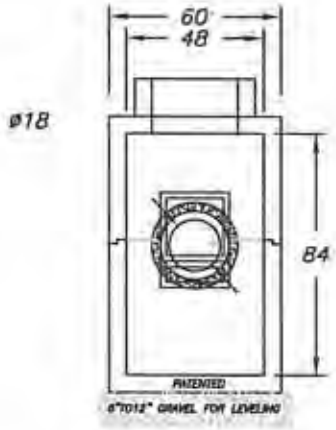

RIGHT END VIEW

DISTRIBUTED BY:
BIO CLEAN ENVIRONMENTAL SERVICE
P.O. BOX 869, OCEANSIDE, CA. 92049
TEL. 760-433-7640 FAX:760-433-3176
Email: info@biocleanenvironmental.net

SUNTREE TECHNOLOGIES, INC. 798 CLEARLAKE RD. SUITE #2 COCOA, FL. 32922		PROJECT: SUNTREE TECHNOLOGIES SPEC.	
NUTRIENT SEPARATING BAFFLE BOX MODEL NO.NSBB 4-8-84		REVISIONS: BASKET SYSTEM	DATE: 01/06/04
DATE: 01/01/04	SCALE:SF = 72	REVISIONS:	DATE:
DRAFTER: N.R.B.	UNITS =INCHES	REVISIONS:	DATE:

Tecnical Specifications

For The Nutrient Separating Baffle Box Model – Stormwater Treatment System

1. The stormwater treatment system shall be capable of inline installation with minimal head loss. Offline installation is not an acceptable alternative, unless orginally deisigned by the engineer. Treatment of gross solids must occur at flow rates higher than the specified treatment flow. The stormwater treatment system must provide treatment at all flow rates.

2. For flows of 74.67 gpm per square foot of settling chamber area a removal efficiency of at least 90% for TSS will be achieved and flows of up to 124.44 gpm per square foot of seelting chamber area will be able to pass through the stormwater treatment system for treatment without causing scouring. This must be proven though full scale testing.

3. The stormwater treatment system will be able to store captured solid debris such as leaves and litter in a dry state within the nutrient separating screen sysetm between rain events. The volume of dry storage will be equal or greater than that specificed on the drawing.

4. The stormwater treatment system will have the capacity to store equal to or greater than that specified on the drawing for captured sediment.

5. The stormwater treatment system will have a skimmer located in front of the outflow opening. The bottom of the skimmer will be located 6" below the static water level. Adjacent to the influent side of the skimmer is a cage containing many hydrocarbon absorption booms that will float at the top surface of the water in the stormwoter treatment structure. This ensures absorption of hydrocarbons though a wide range of operating flows.

6. The nutrient separating screen system shall be positioned approximately 3.5" above the static water level within the baffle box. Adjacent to the inflow, the screen system will have openings on both sides that have a combined cross sectional area that exceeds the cross sectional area of the pipe. These openings will act as an internal bypass for water flow in the event that the screen system becomes full of debris.

7. The nutrient separating screen system shall have a minimum of 6" of vertical adjustment. The adjustment method shall be a system with brackets that are attached to the sides of the screen system that will slide vertically along 1 1/2" x 1 1/2" aluminum square poles. Two stainless steel bolts on each bracket can be tightened to lock the screen system in place, or loosened to allow for vertical adjustment of the screen system. The square poles are anchored to the baffle wall by 1/2" minimum diameter stainless steel bolts.

8. The nutrient separating screen system shall have a minimum of 3" of horizontal adjustment in the direction of the length of the concrete structure. The brackets that clamp the vertical adjustment poles to the side of the screen system can be repositioned to allow of horizontal adjustment.

9. The nutrient separating screen system shall have a section adjacent to the inflow which is hinged and can be opened for cleaning. This section will function as a screened ramp to direct debris into the main body of the screened system. The sides of this section will be made of stainless steel screen and transition in vertical height from a minimum of 8" tall nearest the inflow to the height of the main body of the screen system. The lower sides along this inflow section will provide bypass for water flow around the main body of the screen system if necessary. The cross sectional area of the bypass around the screen system will be equal to or exceed the cross sectional area of the inflow pipe.

10. The nutrient separating screen system shall give access from above grade to the lower sediment collection chambers by the following method. The bottom of the screen system will contain hinged screened doors that can be opened in such a way as to allow adequate access for a vacuum truck to remove everything in all the lower collection chambers.

11. The nutrient separating screen will be a welded aluminum framework spanned by stainless steel screen, be rectangular in shape, and be formed to make a bottom, 2 long sides, and 1 end ; the top and 1 end will remain open. The screen system will consist of panel sections that are held together with stainless steel bolts. When the panel sections are unbolted and separated from each other they must be able to pass through an access hatch or manhole in the top of the baffle box for removal purposes. The aluminum frame work will be made 1 1/2" x 1 1/2" x ¼" aluminum angle beam. The screen used to span the aluminum frame is described as follows: For the body of the screen system, flattened expanded stainless steel sheet 1/2" No. 16 F; Open area = 60%; Grade = 304 Stainless Steel. The screen will be attached to the screen system frame by sandwiching the screen to the aluminum frame between a series of 1" x 3/16" aluminum bars and welded in place.

12. A turbulence deflector will be attached near the top of each of the baffles with ½" stainless steel through bolts and stainless steel fender washers. The turbulence deflectors will be made from laminated fiberglass and measure a minimum of 1/4" in thickness. The turbulence deflectors will form a horizontal ledge that measures 8" from the downstream side of the first baffle and 6" from the downstream side of the second baffle, and span the full width of the baffle box.

13. The stormwater treatment system will be precast concrete. The concrete will be 28 day compressive strength fc = 5,000 psi. Steel reinforcing will be ASTM A – 615 Grade 60. Structure will support an H20 loading as indicated by AASHTO. The joint between the concrete sections will ship lap and the joint sealed with Ram–Nek or equal butyl rubber joint sealant.

14. For access into the stormwater treatment system, two to three holes will be cast into the top of the vault.

15. The inflow and outflow pipes will not intrude beyond flush with the inside surface of the Nutrient Separating Baffle Box. The space between the pipe holes in the ends of the stormwater treatment system and the outside surface of the pipe will be filled with non–shrink grout to form a water proof seal.

16. The nutrient separating screen system shall extended more than half way of the internal lenght of the stormwater treatment system. The nutrient separating screen system shall start at the inflow pipe not more than 4" from the wall of the inflow pipe.

17. The stormwater treatment system must have two separate reports verifying no scouring occurs at flows equal to or greater than the specified treatment flow rate for that particle size distribution.

18. The stormwater treatment system shall have a shallow sump, not more than 48" from invert of outflow pipe to bottom floor of the sump area.

19. The stormwater treatment system must have a miniumium of two sediment chambers (sump areas) which are separated by a vertical wier that divides the chamber from the bottom of the sump to the invert of the outflow pipe. No openings are allowed at the bottom or coming up vertically along the wier. Or any other method that would connect the two chambers together such as orfices.

Nutrient Separating Baffle Box

Removal Efficiencies and Flow Rates

NSBB MODEL#	80% TSS Removal 1000 µm Particle Size @ Peak Treatment Flow	80% TSS Removal 250 µm Particle Size @ Peak Treatment Flow	80% TSS Removal 150 µm Particle Size @ Peak Treatment Flow	80% TSS Removal 125 µm Particle Size @ Peak Treatment Flow	80% TSS Removal 75 µm Particle Size @ Peak Treatment Flow	80% TSS Removal 50 µm Particle Size @ Peak Treatment Flow
	(Max Treatment Capacity Recommended)	Peak Treatment Flows (C.F.S)				
4-6.5-72	10.6	6.93	3.58	2.14	1.27	0.87
4-8-84	10.6	8.53	4.41	2.63	1.56	1.07
5-10-84	29.5	13.33	6.89	4.11	2.44	1.67
6-12-84	42.4	19.20	9.92	5.92	3.52	2.40
8-12-96	95.4	25.60	13.23	7.89	4.69	3.20
8-14-96	95.4	29.87	15.43	9.21	5.48	3.73
10-14-96	169.6	37.33	19.29	11.51	6.84	4.67

No Re-Suspension at These Flow Rates

Typical Particle Size Distribution (PSD) Of Stormwater Pollutants - Varies Based Upon Storm Intensity, Land Use, Impervious Coefficient, Geographical Region, Storm Drain Design

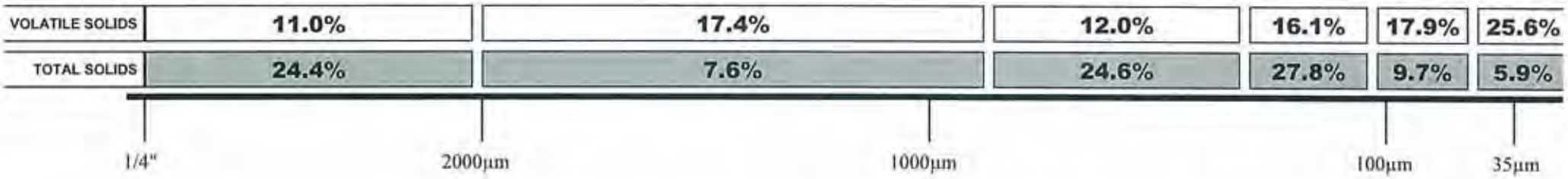

"While TSS measures the fine material suspended in the water column, it does not measure the larger bedload particles that are found in the bottom of a pipe, too heavy to become suspended except in high velocities" (ASCE Monitoring Guidelines for Measuring Stormwater Gross Solids, Stormwater Magazine, Nov/Dec 2005)".

BIO CLEAN ENVIRONMENTAL SERVICES, INC.

P O Box 869, Oceanside, CA 92049
(760) 433-7640 • Fax (760) 433-3176
www.biocleanenvironmental.net

"The Stormwater Standard"

High Capacity Basket

w/ Easy Maintenance Shelf System

Extreme Durability—
Constructed from:

- Heavy Duty UV Protected Marine Grade Fiberglass
- High Grade Stainless Steel Hardware and Screens

5 Year
Unlimited Warranty on Construction

The Easiest Filter to Clean and Install

- Maintenance and Cleaning Crews Throughout Southern California Appreciate the User Friendly Design of Our Filters.

BIO CLEAN
ENVIRONMENTAL SERVICES. INC.™

"The Stormwater Standard"

P O Box 869, Oceanside, CA 92049
(760) 433-7640 • Fax (760) 433-3176
www.biocleanenvironmental.net

APPENDIX 5

BMP Operation and Maintenance Procedures

Permanent BMP Maintenance Agreement

Once the City of Imperial Beach approves the Post-Construction BMP Plan included in this Water Quality Technical Report, the Maintenance Agreement will be signed, notarized, and submitted to the City.

Operational & Maintenance Guidelines for Biofilters

The operational and maintenance needs of a planter box/bioretention area are:

- Bi-annual health evaluation of the plants and subsequent removal of any dead or diseased vegetation.
- Vegetation management to maintain adequate hydraulic functioning and to limit habitat for disease-carrying animals.
- Mulch replacement prior to the beginning of the rainy season every 2-3 years and when erosion is evident.
- Animal and vector control.
- Trash, debris, grass trimmings, tree pruning, and leaf collection and removal to prevent obstruction of a bioretention area.
- Removal of standing water, which indicates improper infiltration rates and may contribute to the development of aquatic plant communities or mosquito breeding areas.
- Preventive maintenance on associated BMP equipment and structures, such as downspouts.
- Erosion and structural maintenance to prevent the loss of soil and maintain the performance of the bioretention area.

Inspection Frequency

The facility will be inspected and inspection visits will be completely documented:

- Once a month at a minimum.
- After every large storm (after every storm monitored or those storms with more than 0.50 inch of precipitation.)
- On a weekly basis during extended periods of wet weather.

Aesthetic and Functional Maintenance

Aesthetic maintenance is important for public acceptance of stormwater facilities. Functional maintenance is important for performance and safety reasons. Both forms of

Corrective Maintenance

Corrective maintenance is required on an emergency or non-routine basis to correct problems and to restore the intended operation and safe function of a Biofilter. Corrective maintenance activities include:

- Removal of Debris and Sediment. Sediment, debris, and trash, which impede the hydraulic functioning of a bio-filter and prevent vegetative growth, will be removed and properly disposed. Temporary arrangements will be made for handling the sediments until a permanent arrangement is made. Vegetation will be re-established after sediment removal.

- Structural Repairs. Once deemed necessary, repairs to structural components of a bio-filter, such as inlet and outlet structures or underdrains, will be done within 10 working days. Qualified individuals (i.e., the designers or contractors) will conduct repairs where structural damage has occurred.

- Elimination of Animal Burrows. Animal burrows will be filled and steps taken to remove the animals if burrowing problems continue to occur (filling and compacting). If the problem persists, vector control specialists will be consulted regarding removal steps. This consulting is necessary as the threat of rabies in some areas may necessitate the animals being destroyed rather than relocated. If the BMP performance is affected, abatement will begin. Otherwise, abatement will be performed annually in September.

- General Facility Maintenance. In addition to the above elements of corrective maintenance, general corrective maintenance will address the overall facility and its associated components. If corrective maintenance is being done to one component, other components will be inspected to see if maintenance is needed.

Debris and Sediment Disposal

Waste generated at the water quality band is ultimately the responsibility of the Port of San Diego. Disposal of sediment, debris, and trash will comply with applicable local, county, state, and federal waste control programs.

Hazardous Waste

Suspected hazardous wastes will be analyzed to determine disposal options. Hazardous wastes generated onsite will be handled and disposed of according to applicable local, state, and federal regulations. A solid or liquid waste is considered a hazardous waste if it exceeds the criteria listed in the CCR, Title 22, Article 11.

OPERATION & MAINTENANCE

Nutrient Separating Baffle Box

Maintenance: The Nutrient Separating Baffle Box is designed to allow for the use of vacuum removal of captured materials in the filter screens and sediment chambers, serviceable by centrifugal compressor vacuum units without causing damage to the filter or during normal cleaning and maintenance. Filters can be cleaned and vacuumed from the standard manhole access.

Maintenance Notes:

1. Bio Clean Environmental Services, Inc. recommends the Nutrient Separating Baffle Box be inspected a minimum of once every six months. The cleaning and debris removal maintenance a minimum of once year and replacement of hydrocarbon booms once a year. The procedure is easily done with the use of any standard vacuum truck.
2. Following maintenance and/or inspection, the maintenance operator shall prepare a maintenance/inspection record. The record shall include any maintenance activities performed, amount and description of debris collected, and condition of filter.
3. The owner shall retain the maintenance/inspection record for a minimum of five years from the date of maintenance. These records shall be made available to the governing municipality for inspection upon request at any time.
4. Any person performing maintenance activities must have completed a minimum of OSHA 24-hour hazardous waste worker (hazwoper) training.
5. Remove access manholes lid to gain access to filter screens and sediment chambers. Where possible the maintenance should be performed from the ground surface. Note: entry into an underground stormwater vault such as an inlet vault requires certification in confined space training.
6. Remove all trash, debris, and organics from the Nutrient Separating Screen with the vacuum hose.
7. The Nutrient Separating Screen has 3 hinged panels which will open into an upright position. This will expose the baffles. Using a vacuum hose, remove the sediment in the baffle chambers.
8. Evaluation of the hydrocarbon boom shall be performed at each cleaning. If the boom is filled with hydrocarbons and oils it should be replaced. Place new booms properly in media cage.
9. Transport all debris, trash, organics and sediments to approved facility for disposal in accordance with local and state requirements.
10. The hydrocarbon boom is classified as hazardous material and will have to be picked up and disposed of as hazardous waste. Hazardous material can only be handled by a certified hazardous waste trained person (minimum 24-hour hazwoper).

BIO CLEAN
ENVIRONMENTAL SERVICES, INC.

P O Box 869, Oceanside, CA 92049
(760 433-7640 Fax (760) 433-3176
www.biocleanenvironmental.net

Curb Inlet Basket

I. Specifications

Coverage: The curb inlet basket provides full coverage of inlets such that all catch basin influent, at rated flows, is conveyed to the filter. The filter will retain all windblown and swept debris entering the drain.

Shelf System: The filter basket is located in the catch basin directly beneath a manhole opening for direct service/access from the manhole. The filter provides a shelf system made of UV protected marine grade fiberglass to direct water flow from the curb inlet to the filter, which is located directly under the manhole.

Non-Corrosive Materials: All components of the filter system, including mounting hardware, fasteners, support brackets, filtration material, and support frame are constructed of non-corrosive materials (316 stainless steel, and UV/marine grade fiberglass). Fasteners are stainless steel. Primary filter mesh is 316 stainless steel welded screens. Filtration basket screens for coarse, medium and fine filtration is ¾" x 1 ¾"expanded, 10 x 10 mesh, and 35 x 35 mesh with optional 50 x 50 mesh and 200 x 200 mesh, respectively. No polypropylene, monofilament netting or fabrics shall be used in the products.

Durability: Filter (excluding oil absorbent media) and support structures are of proven durability, with an expected service life of 10 to 15 years. The filter and mounting structures are of sufficient strength to support water, sediment, and debris loads when the filter is full, with no slippage, breaking, or tearing. All filters are warranted for a minimum of five (5) years.

Oil Absorbent Media: The Filter is fitted with an absorbent media for removal of petroleum hydrocarbons from influent, and so placed in the filter assembly to treat influent at rated flow. Absorbent media is easily replaceable in the filter, without the necessity of removing fixed mounting brackets or mounting hardware.

Overflow Protection: The drain filter is designed so that it does not inhibit storm flows entering the curb inlet, or obstruct flow through the catch basin during peak storm flows.

Filter Bypass: Water will not bypass the filter at low flows, nor bypass through attachment and inlet contact surfaces at low flows.

Pollutant Removal Efficiency: The filter is designed to capture high levels of trash and litter, grass and foliage, sediments, hydrocarbons, grease and oil.

POLLUTANT	**Curb Inlet** Basket
Trash & Litter	90 to 95%
Oil & Grease	54 to 96%
Sediments/TSS	93.54%
Organics	79.3%
Total Nitrogen	65 to 96%
Total Phosphorus	71 to 96%

Non-Scouring: During heavy storm flows or other flows that bypass the filter, the filter screen design prevents washout of debris and floatables in the filter basket.

Filter Removal: The filter basket is readily removable from the mounting/support frame for maintenance or replacement. Removal and replacement of filter screens is accomplished without the necessity of removing mounting bolts, support frames, etc., but by lift out through the manhole.

II. Installation

Installation: The filter will be securely installed in the catch basin or curb inlet opening, with contact surfaces sufficiently joined together so that no filter bypass can occur at low flow. All anchoring devices and fasteners are installed within the interior of the drain inlet. The filter basket is located in the catch basin directly beneath a

manhole opening for direct service/access from the manhole. The filter system provides a shelf system to direct water flow from the inlet to the filter, which is located under the manhole.

Installation Notes:

1. Bio Clean Environmental Services, Inc notes the Curb Inlet Basket shall be installed pursuant to the manufacturer's recommendations and the details on this sheet.
2. The patented shelf system shall provide coverage of entire inlet opening, including inlet wing(s) where applicable, to direct all flow to basket(s).
3. Attachments to inlet walls shall be made of non-corrosive hardware.
4. Shelf system shall be installed so that filtration basket is located under manhole access.
5. For the Continuous Curb Inlet Basket(No Shelf System), install bracket under curb opening and hang basket on bracket

III. Maintenance

Maintenance: The filter is designed to allow for the use of vacuum removal of captured materials in the filter basket, serviceable by centrifugal compressor vacuum units without causing damage to the filter or any part of the mounting and attachment hardware during normal cleaning and maintenance. Filters can be cleaned and vacuumed from the manhole-opening. Entering the catch basin to clean the filters is not necessary.

Maintenance Notes:

1. Bio Clean Environmental Services, Inc. recommends cleaning and maintenance of the Curb Inlet Basket a minimum of four times per year or following a significant rain event that would potentially accumulate a large amount of debris to the system. The hydrocarbon boom should be replaced a minimum of twice per year or at each service as needed.
2. Any person performing maintenance activities that require entering the catch basin or handle a toxic substance have completed the proper training as required by OSHA.
3. Remove manhole lid to gain access to inlet filter insert. The filter basket should be located directly under the manhole lid. Under normal conditions, cleaning and maintenance of the Curb Inlet Basket will be performed from above ground surface.
4. Special Note: entry into an underground manhole, catch basin and stormwater vault requires training in an approved Confined Space Entry Program.
5. Remove all trash, debris, organics, and sediments collected by the inlet filter insert. Removal of the trash and debris can be done manually or with the use of a vactor truck. Manual removal of debris may be done by lifting the basket from the shelf and pulling the basket from the catch basin and dumping out the collected debris.
6. Any debris located on the shelf system can be either removed from the shelf or can be pushed into the basket and retrieved from basket.
7. Evaluation of the hydrocarbon boom shall be performed at each cleaning. If the boom is filled with hydrocarbons and oils it should be replaced. Removed boom by cutting plastic ties and remove boom. Attach new boom to basket with plastic ties through pre-drilled holes in basket.
8. Place manhole lid back on manhole opening.
9. Transport all debris, trash, organics and sediments to approved facility for disposal in accordance with local and state requirements. The hydrocarbon boom with adsorbed hydrocarbons is considered hazardous waste and need to be handled and disposed of as hazardous material. Please refer to state and local regulations for the proper disposal of used motor oil/filters.
10. Following maintenance and/or inspection, the maintenance operator shall prepare a maintenance/inspection record. The record shall include any maintenance activities performed, amount and description of debris collected, and condition of filter. The owner shall retain the maintenance/inspection record for a minimum of five years from the date of maintenance. These records shall be made available to the governing municipality for inspection upon request at any time.
11. Any toxic substance or item found in the filter is considered as hazardous material can only be handled by a certified hazardous waste trained person (minimum 24-hour hazwoper).

BIO CLEAN
ENVIRONMENTAL SERVICES, INC.

P O Box 869, Oceanside, CA 92049
(760 433-7640 Fax (760) 433-3176
www.biocleanenvironmental.net